Heating & Air Conditioning
Amana®
Comfort. Quality. Trust.

Two-Stage Variable Speed Gas-Fired Furnace

Installation Instructions

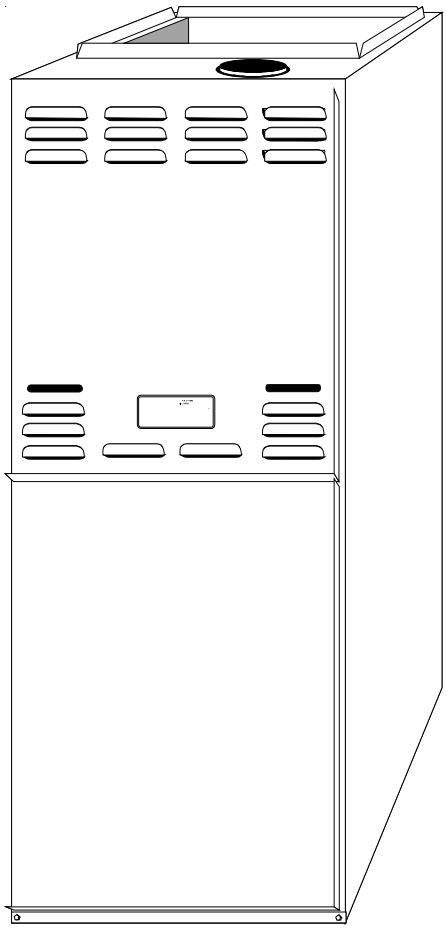

This Forced Air Central Furnace design complies with requirements embodied in

The American National Standard / National Standard of Canada shown below:

ANSI Z21.47·CSA-2.3 Gas Fired Central Furnaces

Part No. 10759833
Printed in USA

Goodman Company, L.P.
1810 Wilson Parkway • Fayetteville, Tennessee 37334
www.amana-hac.com

February 2003

Table of Contents

TO THE INSTALLER

Before installing this unit please read this manual and the Specification Sheet to familiarize yourself on the specific items which must be adhered to such as maximum external static pressure to unit, air temperature rise, minimum or maximum CFM and motor speed connections.

TO THE OWNER

Your warranty certificate is also supplied with the unit. Read the warranty carefully and note what is covered. Keep the warranty certificate in a safe location for future reference.

If additional information or operating instructions are required, contact the dealer where the purchase was made.

If the residence is left unattended for an extended period of time (i.e., 4 hours or greater), have your heating system periodically checked to ensure proper operation. Potential circumstances beyond our control such as power outages, gas service interruptions, product installation, or component failures could result in heating system operational problems.

Table of Contents

Safety Instructions

Recognize Safety Symbols, Words, and Labels

Please adhere to the following warnings and cautions when installing, adjusting, altering, servicing, or operating the furnace. Failure to heed safety information increases the risk of personal injury, property damage, and/or product damage.

WARNING

If the information in these instructions is not followed exactly, fire or explosion may result causing property damage, personal injury or loss of life.

- **Do not store or use gasoline or other flammable vapors and liquids in the vicinity of this or any other appliance.**
- **What to do if you smell gas:**
  - **Do not try to light any appliance.**
  - **Do not touch any electrical switch; do not use any phone in your building.**
  - **Immediately call your gas supplier from a neighbor's phone. Follow the gas supplier's instructions.**
  - **If you cannot reach your gas supplier, call the fire department.**
- **Installation and service must be performed by a qualified installer, service agency or the gas supplier.**

WARNING

Should overheating occur or the gas supply fail to shut off, turn off the manual gas shut-off valve external to the furnace before turning off the electrical supply.

WARNING

To prevent personal injury or death due to improper installation, adjustment, alteration, service or maintenance, refer to this manual. For additional assistance or information, consult a qualified installer, service agency or the gas supplier.

Safety Instructions

WARNING

To prevent possible death or personal injury due to asphyxiation, this Non-Condensing Gas Fired Warm Air Furnaces must be Category I vented. Do not vent any of these furnaces using Category III venting.
Provisions must be made for venting combustion products outdoors through a proper venting system. The length of flue pipe could be a limiting factor in locating the furnace.

WARNING

This product contains or produces a chemical or chemicals which may cause serious illness or death and which are known to the State of California to cause cancer, birth defects or other reproductive harm.

WARNING

To prevent possible death, personal injury or property damage due to electrical shock, the furnace must be located to protect the electrical components from water.

CAUTION

This unit must not be used as a "construction heater" during the finishing phases of construction on a new structure. This type of use may result in premature failure of the unit due to extremely low return air temperatures and exposure to corrosive or very dirty atmospheres.

General Information

Shipping and Handling

All units are securely packed in shipping containers tested according to International Safe Transit Association specifications. The carton must be checked upon arrival for external damage. If damage is found, a request for inspection by carrier's agent must be made in writing immediately.

The furnace must be carefully inspected on arrival for damage and bolts or screws which may have come loose in transit. In the event of damage the consignee should:

1. Make a notation on delivery receipt of any visible damage to shipment or container.
2. Notify carrier promptly and request an inspection.
3. With concealed damage, carrier must be notified as soon as possible - preferably within five days.
4. File the claim with the following support documents within a nine month statute of limitations.
   - Original or certified copy of the Bill of Lading, or indemnity bond.
   - Original paid freight bill or indemnity in lieu thereof.
   - Original or certified copy of the invoice, showing trade and other discounts or reductions.
   - Copy of the inspection report issued by carrier's representative at the time damage is reported to carrier.

The carrier is responsible for making prompt inspection of damage and for a thorough investigation of each claim. The distributor or manufacturer will not accept claims from dealers for transportation damage.

Product Application

This furnace is primarily designed for residential home-heating applications. It is NOT designed or certified for use in mobile homes, trailers or recreational vehicles. Neither is it designed or certified for outdoor applications. The furnace **must** be installed indoors (i.e., attic space, crawl space, or garage area provided the garage area is enclosed with an operating door).

This furnace can be used in the following non-industrial commercial applications:

Schools, Office buildings, Churches, Retail stores

Nursing homes, Hotels/motels, Common or office areas

In such applications , the furnace must be installed with the following stipulations:

- **It must be installed per the Installation Instructions provided and per local and national codes.**
- **It must be installed indoors in a building constructed on site.**
- **It must be part of a ducted system and not used in a free air delivery application.**
- **It must not be used as a "make-up" air unit.**
- **All other warranty exclusions and restrictions apply. This furnace is an CSA dual-certified appliance and is appropriate for use with natural or propane gas.**

Product Application (cont'd)

WARNING

Possible death, personal injury or property damage due to fire, explosion, smoke, soot, condensation, electrical shock or carbon monoxide may result from improper installation, repair, operation, or maintenance of this product.

WARNING

To prevent death, personal injury or property damage due to fire, do not install this furnace in a mobile home, trailer, or recreational vehicle.

To ensure proper furnace operation, install, operate and maintain this furnace in accordance with these installation and operation instructions, all local building codes and ordinances. In their absence, follow the latest edition of the National Fuel Gas Code (NFPA 54/ANSI Z223.1), and/or CAN/CSA B149 Installation Codes, local plumbing or waste water codes, and other applicable codes.

A copy of the National Fuel Gas Code (NFPA 54/ANSI Z223.1) can be obtained from any of the following:

American National Standards Institute
1430 Broadway
New York, NY 10018

National Fire Protection Association
1 Batterymarch Park
Quincy, MA 02269

CSA International
8501 East Pleasant Valley
Cleveland, OH 44131

A copy of the CAN/CSA B149 Installation Codes can also be obtained from:

CSA International
178 Rexdale Boulevard
Etobicoke, Ontario, Canada M9W 1R3

The rated heating capacity of the furnace should be greater than or equal to the total heat loss of the area to be heated. The total heat loss should be calculated by an approved method or in accordance with "ASHRAE Guide" or "Manual J-Load Calculations" published by the Air Conditioning Contractors of America.

General Information

Location Requirements and Considerations

⚠ WARNING

To prevent possible death, personal injury, equipment damage, or property damage the following bullet points must be observed when installing the unit.

Follow the instructions listed below when selecting a furnace location. Refer also to the guidelines provided in the section *Combustion and Ventilation Air Requirements.*

- Centrally locate the furnace with respect to the proposed or existing air distribution system.
- Ensure the temperature of the return air entering the furnace is between 55°F and 100°F when the furnace is heating.
- Provisions must be made for venting combustion products outdoors through a proper venting system. The length of flue pipe could be a limiting factor in locating the furnace.
- Ensure adequate combustion air is available for the furnace. Improper or insufficient combustion air can expose building occupants to gas combustion products that could include carbon monoxide. Refer to *Condensate Drain Lines and Trap* for further details.
- The furnace must be level. If the furnace is to be set on a floor that may become wet or damp at times, the furnace should be supported above the floor on a concrete base sized approximately 1-1/2" larger than the base of the furnace.
- Ensure upflow or horizontal furnaces are not installed directly on carpeting, or any other combustible material. The only combustible material allowed is wood.
- Exposure to contaminated combustion air will result in safety and performance-related problems. Do not install the furnace where the combustion air is exposed to the following substances:

  chlorinated waxes or cleaners
  chlorine-based swimming pool chemicals
  water softening chemicals
  deicing salts or chemicals
  carbon tetrachloride
  halogen type refrigerants
  cleaning solutions (such as perchloroethylene)
  printing inks
  paint removers
  varnishes
  hydrochloric acid
  cements and glues
  antistatic fabric softeners for clothes dryers
  and masonry acid washing materials
- If the furnace is used in connection with a cooling unit, install the furnace upstream or in parallel with the cooling unit. Premature heat exchanger failure will result if the cooling unit is placed ahead of the furnace.
- If the furnace is installed in a residential garage, position the furnace so that the burners and ignition source are located not less than 18 inches (457 mm) above the floor. Protect the furnace from physical damage by vehicles.
- If the furnace is installed horizontally, the furnace access doors must be vertical so that the burners fire horizontally into the heat exchanger. Do not install the unit with the access doors on the “up/top” or “down/bottom” side of the furnace.
- Do not connect this furnace to a chimney flue that serves a separate appliance designed to burn solid fuel.

Clearances and Accessibility

Installations must adhere to the clearances to combustible materials which this furnace has been design certified to.

Allow clearances from the enclosure as shown on Specification Sheet for fire protection, proper operation, and service access. These clearances must be permanently maintained. The combustion and ventilating air openings in the front and top panels of the furnace must never be obstructed.

Furnace Suspension

If suspending the furnace from rafters or joist, use 3/8" threaded rod and 2”x2”x1/8” angle iron as shown below. The length of rod will depend on the application and the clearances necessary.

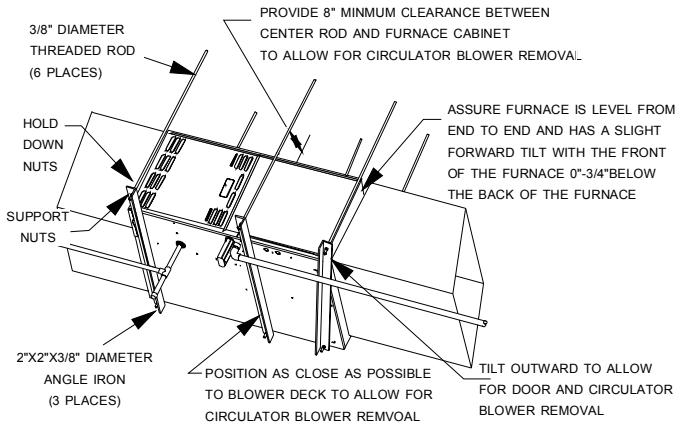

Suspended Furnace

Existing Furnace Removal

NOTE: When an existing furnace is removed from a venting system serving other appliances, the venting system may be too large to properly vent the remaining attached appliances.

The following vent testing procedure is reproduced from the **American National Standard/National Standard of Canada for Gas-Fired Central Furnaces ANSI Z21.47-1998, CSA-2.3-M98 Section 1.23.1.**

The following steps shall be followed with each appliance connected to the venting system placed in operation, while any other appliances connected to the venting system are not in operation:

a. Seal any unused openings in the venting system;

b. Inspect the venting system for proper size and horizontal pitch, as required by the National Fuel Gas Code, ANSI Z223.1 or the CSA B149 Installation Codes and these instructions. Determine that there is no blockage or restriction, leakage, corrosion and other deficiencies which could cause an unsafe condition;

c. In so far as practical, close all building doors and windows and all doors between the space in which the appliance(s) connected to the venting system are located and other spaces of the building. Turn on clothes dryers and any appliance not connected to the venting system. Turn on any exhaust fans, such as range hoods and bathroom exhausts, so they shall operate at maximum speed. Do not operate a summer exhaust fan. Close fireplace dampers;

d. Follow the lighting instructions. Place the appliance being inspected in operation. Adjust thermostat so appliance shall operate continuously;

e. Test for draft hood equipped spillage at the draft hood relief opening after 5 minutes of main burner operation. Use the flame of a match or candle;

f. After it has been determined that each appliance connected to the venting system properly vents when tested as outlined above, return doors, windows, exhaust fans, fireplace dampers and any other gas burning appliance to their previous conditions of use;

g. If improper venting is observed during any of the above tests, the common venting system must be corrected.

Corrections must be in accordance with the latest edition of the National Fuel Gas Code NFPA 54/ANSI Z223.1 and/or CSA B149 Installation Codes.

If resizing is required on any portion of the venting system, use the appropriate table in Appendix G in the latest edition of the National Fuel Gas Code ANSI Z223.1 and/or CSA B149 Installation Codes.

Thermostat Requirements

The two stage furnace requires a two stage thermostat for proper operation. A two stage thermostat will have a “W2” terminal in addition to a “W1” terminal. Refer to *Electrical Connections* for proper hookup.

Thermostat Location

In an area having good air circulation, locate the thermostat about five feet high on a vibration-free inside wall. Do not install the thermostat where it may be influenced by any of the following:

- Drafts, or dead spots behind doors, in corners, or under cabinets.
- Hot or cold air from registers.
- Radiant heat from the sun.
- Light fixtures or other appliances.
- Radiant heat from a fireplace.
- Concealed hot or cold water pipes, or chimneys.
- Unconditioned areas behind the thermostat, such as an outside wall.

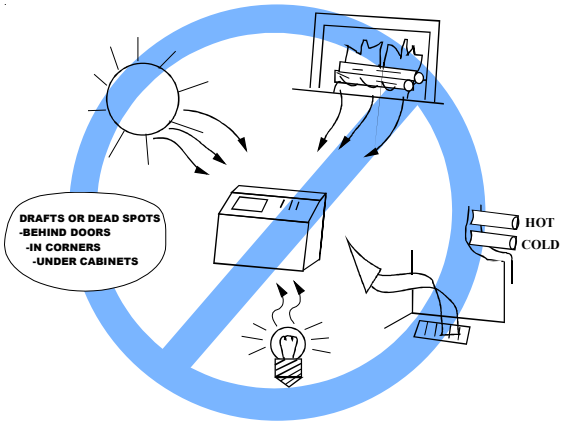

Thermostat Influences

Consult the instructions packaged with the thermostat for mounting instructions and further precautions.

Combustion and Ventilation Air Requirements

WARNING

Possible death, personal injury or property damage may occur if the furnace is not provided with enough fresh air for proper combustion and ventilation of flue gases. Most homes require outside air to be supplied to the furnace area.

Improved construction and additional insulation in buildings have reduced heat loss by reducing air filtration and escape around doors and windows. These changes have helped in reducing heating/cooling costs but have created a problem supplying combustion and ventilation air for gas fired and other fuel burning appliances. Appliances that pull air out of the house (clothes dryers, exhaust fans, fireplaces, etc.) increase the problem by starving appliances for air.

House depressurization can cause back drafting or improper combustion of gas-fired appliances, thereby exposing building occupants to gas combustion products that could include carbon monoxide.

If this furnace is to be installed in the same space with other gas appliances, such as a water heater, ensure there is an adequate supply of combustion and ventilation air for the other appliances. Refer to the latest edition of the National Fuel Gas Code NFPA 54/ANSI Z223.1 (Section 5.3), or CSA B149 Installation Codes (Sections 7.2, 7.3, or 7.4), or applicable provisions of the local building codes for determining the combustion air requirements for the appliances.

This furnace must use indoor air for combustion. It cannot be installed as a direct vent (i.e., sealed combustion) furnace. The burner box is present only to help reduce sound transmission from the burners to the occupied space.

Most homes will require outside air be supplied to the furnace area by means of ventilation grilles or ducts connecting directly to the outdoors or spaces open to the outdoors such as attics or crawl spaces.

The following information on air for combustion and ventilation is reproduced from the **National Fuel Gas Code NFPA 54/ANSI Z223.1 Section 5.3.**

5.3.1 General:

(a) The provisions of 5.3 apply to gas utilization equipment installed in buildings and which require air for combustion, ventilation and dilution of flue gases from within the building. They do not apply to (1) direct vent equipment which is constructed and installed so that all air combustion is obtained from the outside atmosphere and all flue gases are discharged to the outside atmosphere, or (2) enclosed furnaces which incorporate an integral total enclosure and use only outside air for combustion and dilution of flue gases.

(b) Equipment shall be installed in a location in which the facilities for ventilation permit satisfactory combustion of gas, proper venting and the maintenance of ambient temperature at safe limits under normal conditions of use. Equipment shall be located so as not to interfere with proper circulation of air. When normal infiltration does not provide the necessary air, outside air shall be introduced.

(c) In addition to air needed for combustion, process air shall be provided as required for: cooling of equipment or material, controlling dew point, heating, drying, oxidation or dilution, safety exhaust, odor control, and air for compressors.

(d) In addition to air needed for combustion, air shall be supplied for ventilation, including all air required for comfort and proper working conditions for personnel.

(e) While all forms of building construction cannot be covered in detail, air for combustion, ventilation and dilution of flue gases for gas utilization equipment vented by natural draft normally may be obtained by application of one of the methods covered in 5.3.3 and 5.3.4.

(f) Air requirements for the operation of exhaust fans, kitchen ventilation systems, clothes dryers, and fireplaces shall be considered in determining the adequacy of a space to provide combustion air requirements.

5.3.2 Equipment Located in Unconfined Spaces:

In unconfined spaces (see definition below) in buildings, infiltration may be adequate to provide air for combustion ventilation and dilution of flue gases. However, in buildings of tight construction (for example, weather stripping, heavily insulated, caulked, vapor barrier, etc.), additional air may need to be provided using the methods described in 5.3.3-b or 5.3.4.

Space, Unconfined.

For purposes of this Code, a space whose volume is not less than 50 cubic feet per 1,000 BTU per hour of the aggregate input rating of all appliances installed in that space. Rooms communicating directly with the space in which the appliances are installed through openings not furnished with doors, are considered a part of the unconfined space.

5.3.3 Equipment Located in Confined Spaces:

(a) *All Air from Inside the Building:* The confined space shall be provided with two permanent openings communicating directly with an additional room(s) of sufficient volume so that the combined volume of all spaces meets the criteria for an unconfined space. The total input of all gas utilization equipment installed in the combined space shall be considered in making this determination. Each opening shall have a minimum free area of 1 square inch per 1,000 BTU per hour of the total input rating of all gas utilization equipment in the confined space, but not less than 100 square inches. One opening shall be within 12 inches of the top and one within 12 inches of the bottom of the enclosure.

NOTE: Each opening must have a free area of not less than one square inch per 1000 BTU of the total input rating of all equipment in the enclosure, but not less than 100 square inches.

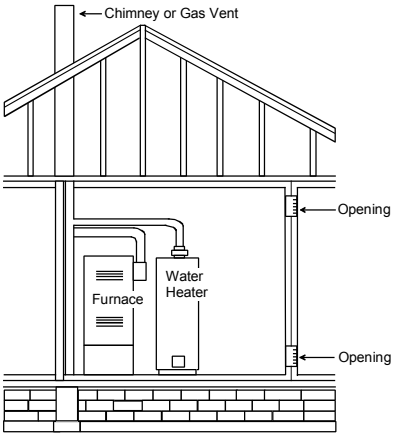

Equipment Located in Confined Spaces; All Air from Inside Building. See 5.3.3-a.

(b) *All Air from Outdoors:* The confined space shall be provided with two permanent openings, one commencing within 12 inches of the top and one commencing within 12 inches of the bottom of the enclosure. The openings shall communicate directly, or by ducts, with the outdoors or spaces (crawl or attic) that freely communicate with the outdoors.

1. When directly communicating with the outdoors, each opening shall have a minimum free area of 1 square inch per 4,000 BTU per hour of total input rating of all equipment in the enclosure.

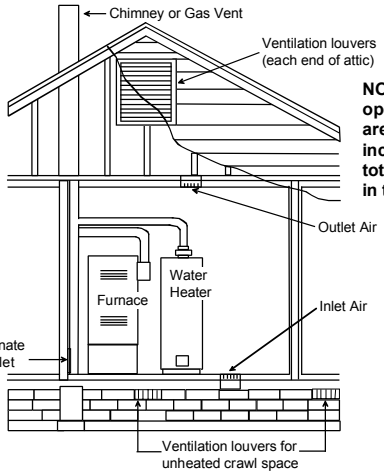

NOTE: The inlet and outlet air openings must each have a free area of not less than one square inch per 4000 BTU of the total input rating of all equipment in the enclosure.

Equipment Located in Confined Spaces; All Air from Outdoors—Inlet Air from Ventilated Crawl Space and Outlet Air to Ventilated Attic. See 5.3.3-b

2. When communicating with the outdoors through vertical ducts, each opening shall have a minimum free area of 1 square inch per 4,000 BTU per hour of total input rating of all equipment in the enclosure.

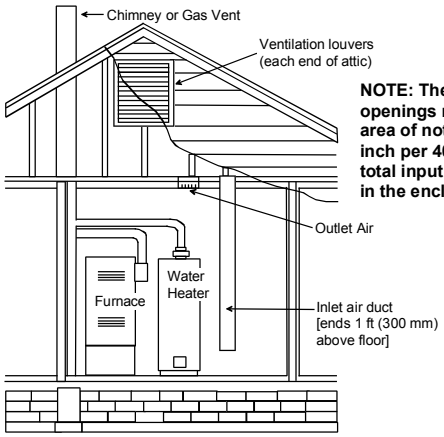

NOTE: The inlet and outlet air openings must each have a free area of not less than one square inch per 4000 BTU of the total input rating of all equipment in the enclosure.

Equipment Located in Confined Spaces; All Air from Outdoors Through Ventilated Attic. See 5.3.3-b.

3. When communicating with the outdoors through horizontal ducts, each opening shall have a minimum free area of 1 square inch per 2,000 BTU per hour of total input rating of all equipment in the enclosure.

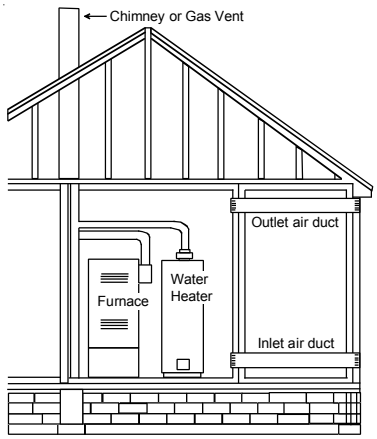

NOTE: The air duct openings must have a free area of not less than one square inch per 2000 BTU of the total input rating of all equipment in the enclosure*.

*If the appliance room is located against an outside wall and the air openings communicate directly with the outdoors, each opening shall have a free area of not less than one square inch per 4,000 BTU per hour of the total input rating of all appliances in the enclosure.

Equipment Located in Confined Spaces; All Air from Outdoors. See 5.3.3-b.

4. When ducts are used, they shall be of the same cross-sectional area as the free area of the openings to which they connect. The minimum dimension of rectangular air ducts shall not be less than 3 inches.

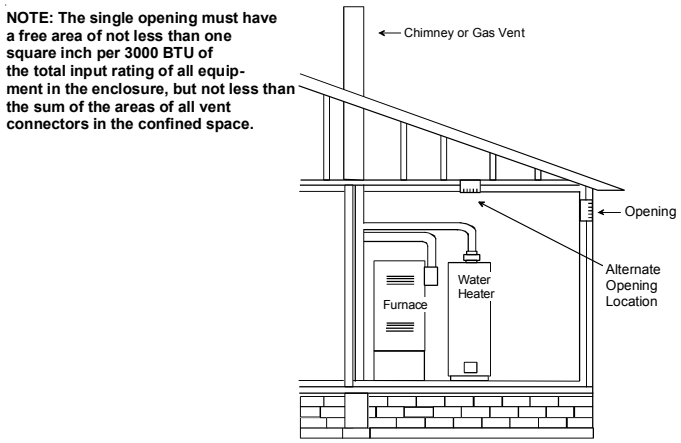

Equipment Located in Confined Spaces; All Air from Outdoors - Single Air Opening. See 5.3.3-b.

5. When directly communicating with the outdoors, the single opening shall have a minimum free area of 1 square inch per 3,000 BTU per hour of total input rating of all equipment in the enclosure.

5.3.4 Specially Engineered Installations:

The requirements of 5.3.3 shall not necessarily govern when special engineering, approved by the authority having jurisdiction, provides an adequate supply of air for combustion, ventilation, and dilution of flue gases.

5.3.5 Louvers and Grilles:

In calculating free area in 5.3.3, consideration shall be given to the blocking effect of louvers, grilles or screens protecting openings. Screens used shall not be smaller than 1/4 inch mesh. If the area through a design of louver or grille is known, it should be used in calculating the size of opening required to provide the free area specified. If the design and free area is not known, it may be assumed that wood louvers will have 20-25 percent free area and metal louvers and grilles will have 60-75 percent free area. Louvers and grilles shall be fixed in the open position or interlocked with the equipment so that they are opened automatically during equipment operation.

5.3.6 Special Conditions Created by Mechanical Exhausting or Fireplaces:

Operation of exhaust fans, ventilation systems, clothes dryers, or fireplaces may create conditions requiring special attention to avoid unsatisfactory operation of installed gas utilization equipment. Air from Inside Building. See 5.3.3-a.

Category I Venting (Vertical Venting)

WARNING

To prevent possible death or personal injury due to asphyxiation, this Non-Condensing Gas Fired Warm Air Furnace must be Category I vented. Do not vent using Category III venting.

Category I Venting is venting at a non-positive pressure. A furnace vented as Category I is considered a fan-assisted appliance and the vent system does not have to be “gas tight.” **NOTE: Single stage gas furnaces with induced draft blowers draw products of combustion through a heat exchanger allowing, in some instances, common venting with natural draft appliances (i.e. water heaters).**

All installations must be vented in accordance with National Fuel Gas Code NFPA 54/ANSI Z223.1 - latest edition. In Canada, the furnaces must be vented in accordance with the National Standard of Canada, CAN/CSA B149.1 and CAN/CSA B149.2 - latest editions and amendments.

NOTE: The vertical height of the Category I venting system must be at least as great as the horizontal length of the venting system.

WARNING

To prevent possible death or personal injury due to asphyxiation, common venting with other manufacturer’s induced draft appliances is not allowed.

Common venting of this furnace is allowed with the addition of a common vent kit (CVK) for each appliance. Contact the local installing dealer, distributor or us directly for more information.

The minimum vent diameter for the Category I venting system is as shown below:

MODEL	MINIMUM VENT DIAMETER
70	4 Inch
90	4 Inch
115	5 Inch
140	5 Inch

Under some conditions, larger vents than those shown above may be required or allowed.

When an existing furnace is removed from a venting system serving other appliances, the venting system may be too large to properly vent the remaining attached appliances.

Induced Draft Blower Relocation

Upflow Upright or Horizontal units are shipped with the induced draft blower discharging from the top of the furnace. ("Top" is as viewed for an upflow installation.) The induced draft blower can be rotated 90 degrees counterclockwise for Category I venting, with the airflow horizontal left to right. For horizontal installations, a four inch single wall pipe can be used to extend the induced draft blower outlet 1/2" beyond the furnace cabinet. Vent the furnace in accordance with the National Fuel Gas Code NFPA 54/ ANSI Z223.1 - latest edition. In Canada, vent the furnace in accordance with the National Standard of Canada, CAN/ CSA B149.1 and CAN/CSA B149.2 - latest editions and amendments.

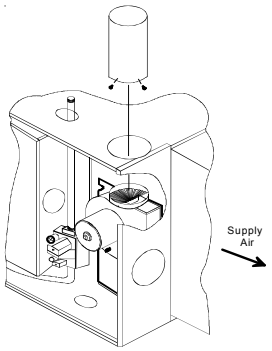

Upflow Rotated Induced Draft Blower

To rotate the induced draft blower counterclockwise proceed as follows:

1. Disconnect electrical power from furnace.

WARNING

To prevent death or personal injury due to electrical shock, disconnect electrical power.

2. Remove the round cutout from the side of the furnace.

   NOTE: The assembly, starting from the outside, is induced draft blower, outer gasket, rotation plate, inner gasket, partition panel).

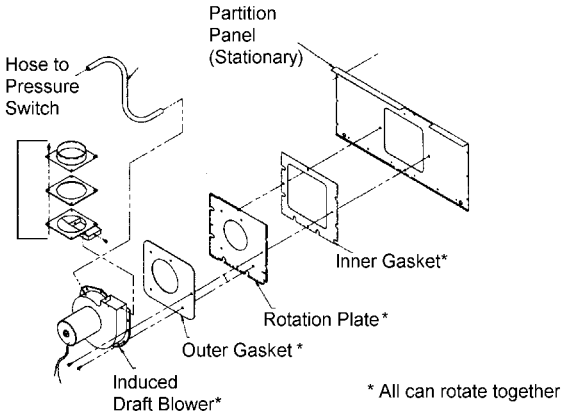

Blower Assembly

3. Remove and save the four screws which hold the rotation plate on the partition panel. Note that one of the screws which hold the induced draft blower on the rotation plate needs to be removed.
4. Turn the rotation plate 90 degrees counterclockwise. The inner gasket must turn with the rotation plate.
5. Reinstall the rotation plate on the partition panel, using the four screws removed in step 3. Tighten screws to provide an airtight seal.
6. Make sure all wires are at least one inch from flue pipe. Relocate junction box to right side of cabinet if necessary. Refer to *Electrical Connections* for instructions.

WARNING

To prevent death or serious illness to building occupants due to flue products leaking into the building, proper installation of gaskets and screws is essential for providing a gas tight seal between the partition panel and the induced draft blower.

WARNING

To prevent death, personal injury or property damage due to fire or explosion, a qualified servicer must determine the reason the rollout protection device opened before the device is reset.

Rollout Protection Device Relocation

Furnaces installed horizontal right-to-left airflow, require the rollout protection device be relocated. This device closes the gas valve if the burner flames are not drawn into the heat exchanger.

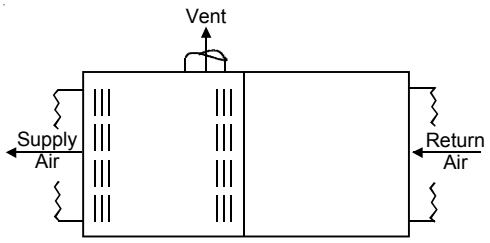

Right To Left Installation

To relocate:

1. Disconnect electrical power.

WARNING

To prevent death or personal injury due to electric shock, disconnect electrical power.

2. Remove the cover from the burner box. Save the screws that held it in place. (**Note:** There are several screw holes, but only four screws. This is intentional, and not a manufacturing defect.)
3. As shipped, the rollout protection device is located near the flame sensor end of the manifold assembly. Remove and save the mounting screws.
4. For most installations, it will not be necessary to remove the wires from the rollout protection device.
5. For horizontal-left installations, a hole is provided near the igniter end of the manifold assembly. Insert the rollout protection device into this hole and attach with screws removed in Step 3.

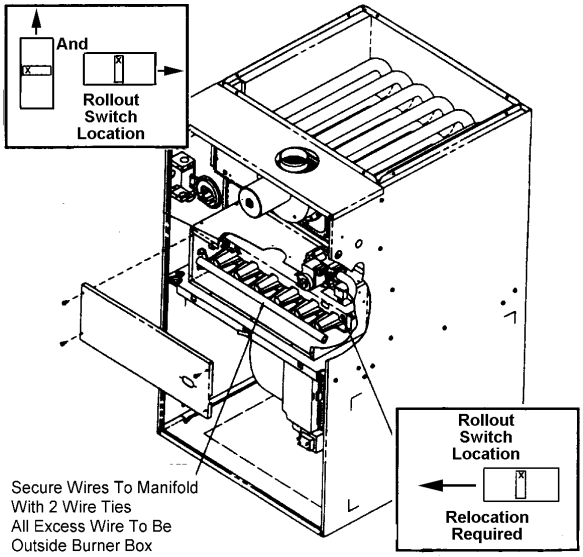

Rollout Switch Relocation

6. Secure rollout wires to manifold and insure no wires can come in contact with burners or other hot surfaces.
7. Push the button to confirm the rollout control is in the closed position.
8. Replace the cover on the burner box, replacing the screws from Step 2.

Electrical Connections

WARNING

To avoid the risk of electrical shock, wiring to the unit must be properly polarized and grounded.

WARNING

To avoid electrical shock, injury or death, disconnect electrical power before servicing or changing any electrical wiring.

CAUTION

Label all wires prior to disconnection when servicing controls. Wiring errors can cause improper and dangerous operation. Verify proper operation after servicing.

WARNING

To avoid the risk of electrical shock, injury, or death, the furnace must be electrically grounded in accordance with local codes or, in their absence, with the latest edition of The National Electric Code.

Wiring Harness

The wiring harness is an integral part of this furnace. Field alteration to comply with electrical codes should not be required. Wires are color and number coded for identification purposes. Refer to the wiring diagram for wire routings. If any of the original wire as supplied with the furnace must be replaced, it must be replaced with wiring material having a temperature rating of at least 105°C. Any replacement wiring must be copper conductor.

115 Volt Line Connections

Before proceeding with electrical connections, ensure that the supply voltage, frequency, and phase correspond to that specified on the unit rating plate. Power supply to the furnace must be N.E.C. Class 1, and must comply with all applicable codes. The furnace must be electrically grounded in accordance with local codes or, in their absence, with the latest edition of The National Electric Code, ANSI NFPA 70 and/or The Canadian Electric Code CSA C22.1.

Use a separate fused branch electrical circuit containing properly sized wire, and fuse or circuit breaker. The fuse or circuit breaker must be sized in accordance with the maximum overcurrent protection specified on the unit rating plate. An electrical disconnect must be provided at the furnace location.

NOTE: Line polarity must be observed when making field connections.

Junction Box Relocation

Line polarity must be observed when making field connections. Line voltage connections can be made through either the right or left side panel. The furnace is shipped configured for a right side electrical connection with the junction box located on the left side of the furnace. To make electrical connections through the opposite side of the furnace, the junction box must be relocated to the other side prior to making electrical connections. To relocate the junction box, perform the steps that follow.

CAUTION

Edges of sheet metal holes may be sharp. Use gloves as a precaution when removing hole plugs.

1. Remove both doors from the furnace.
2. Remove and save the screws holding the junction box to the right side of the furnace.
3. Disconnect the hose from the pressure switch. Leave the other end attached to the induced draft blower.
4. Remove four wires to the pressure switch assembly.
5. Swap locations of the two bushings in the junction box.

6. Rotate the junction box 180 degrees so the access panel continues to face forward. The open snap bushing should now be on the left.
7. Attach pressure switch bracket to left side of furnace where the junction box was using the screws saved in Step 4. The “L” bracket must point toward the front of the furnace. Reroute pressure switch wires through the split grommet on the left side of the blower deck. Reconnect wires using the wiring diagram inside the blower door.
8. Reroute remaining wires through split grommet on the right side of the blower deck.
9. Insert remaining wires through the open bushing in the bottom of the junction box.
10. Attach the junction box to the right side of the furnace, using the screws removed in step 2.
11. Reconnect the hose to the pressure switch.
12. Check the location of the pressure hose and all wiring. Confirm that it will not be damaged by heat from the burners or by the rotation of the fan. Also confirm that wiring location will not interfere with filter removal or other maintenance.

After the junction box is in the desired location, use washers to connect field-supplied conduit to the junction box in accordance with NEC and local codes. Connect hot, neutral, and ground wires as shown in the furnace wiring diagram. The wires and ground screw are located in the furnace junction box.

Low voltage wires may be connected to the terminal strip as shown in the *“Integrated Ignition Control”* figure.

IMPORTANT NOTE: To avoid possible equipment malfunction, route the low voltage wires to avoid interference with filter removal or other maintenance.

WARNING

To avoid the risk of electrical shock, injury, or death, the furnace must be electrically grounded in accordance with local codes or, in their absence, with the latest edition of The National Electric Code.

To ensure proper unit grounding, the ground wire should run from the furnace ground screw located inside the furnace junction box all the way back to the electrical panel.

NOTE: Do not use gas piping as an electrical ground.

To confirm proper unit grounding, turn off the electrical power and perform the following check.

1. Measure resistance between the neutral (white) connection and one of the burners.
2. Resistance should measure 10 ohms or less.

This furnace is equipped with a blower door interlock switch which interrupts unit voltage when the blower door is opened for servicing. Do not defeat this switch.

24 Volt Thermostat Wiring

NOTE: Wire routing must not interfere with circulator blower operation, filter removal, or routine maintenance.

As a two-stage furnace, the furnace integrated control module provides terminals for both “W1” and “W2”, and “YLO” and “Y” thermostat connections. This allows the furnace to support the following system applications: ‘Two-Stage Heating Only’, ‘Two-Stage Heating with Single-Stage Cooling’, and ‘Two-Stage Heating with Two-Stage Cooling’. Refer to the following figures and table for proper connections to the integrated control module.

Low voltage connections can be made through either the right or left side panel. Thermostat wiring entrance holes are located in the blower compartment. Wire routing must not interfere with circulator blower operation, filter removal, or routine maintenance.

This furnace is equipped with a 40 VA transformer to facilitate use with most cooling equipment. Consult the wiring diagram, located on the blower compartment door, for further details of 115 Volt and 24 Volt wiring.

Single Stage Thermostat Application

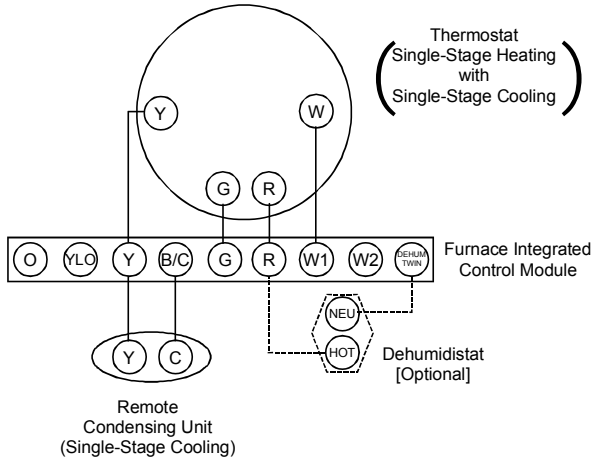

Single-Stage Heating with Single-Stage Cooling

NOTE: To apply a single-stage heating thermostat, the thermostat selector jumper on the integrated Control module *must* be set on single stage.

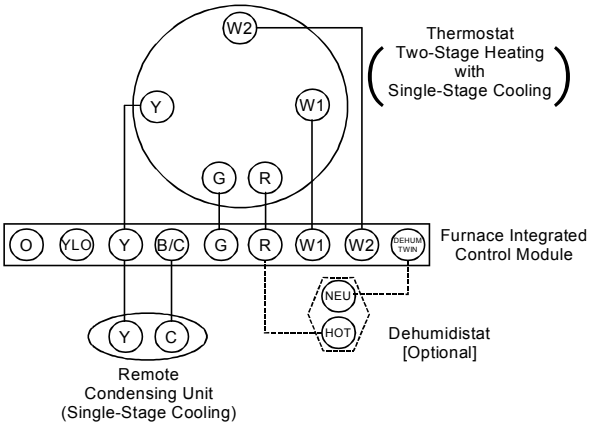

Two-Stage Heating with Single-Stage Cooling

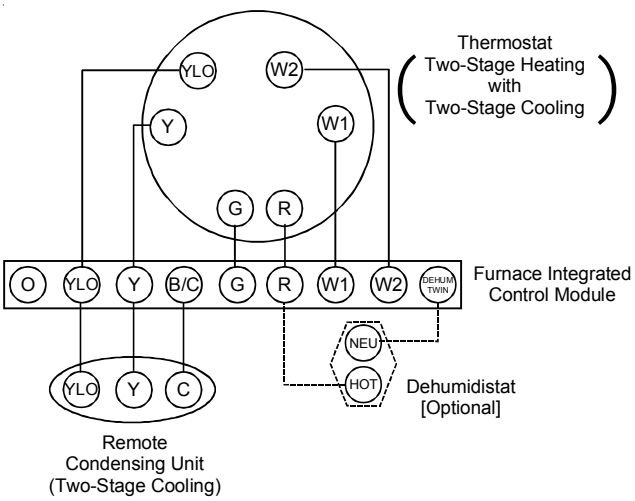

Two-Stage Heating with Two-Stage Cooling

Thermostat Diagrams

This furnace is equipped with a 40 VA transformer to facilitate use with most cooling equipment. Consult the wiring diagram, located on the blower compartment door, for further details of 115 Volt and 24 Volt wiring.115 Volt Line Connection of Accessories (Humidifier and Electronic Air Cleaner)

WARNING

To avoid electrical shock, injury or death, disconnect electrical power before servicing, or changing any electrical wiring.

The furnace's integrated ignition control is equipped with line voltage accessory terminals for controlling power to an optional field-supplied humidifier and/or electronic air cleaner.

The accessory load specifications are as follows:

Humidifier	1.0 Amp maximum at 120 VAC
Electronic Air Cleaner	1.0 Amp maximum at 120 VAC

Turn OFF power to the furnace before installing any accessories. Follow the humidifier or air cleaner manufacturers' instructions for locating, mounting, grounding, and controlling these accessories. Accessory wiring connections are to be made through the 1/4" quick connect terminals provided on the furnace integrated ignition control. The humidifier and electronic air cleaner hot and neutral terminals are identified as HUM and EAC. All field wiring must conform to applicable codes. Connections should be made as shown in the *"Accessories Wiring"* figure.

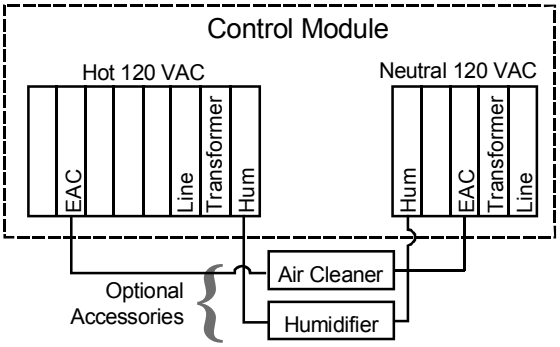

Accessories Wiring

If it is necessary for the installer to supply additional line voltage wiring to the inside of the furnace, the wiring must conform to all local codes, and have a minimum temperature rating of 105°C. All line voltage wire splices must be made inside the furnace junction box.

The integrated ignition control humidifier terminals (HUM) are energized with 115 volts whenever the induced draft blower is energized. The integrated ignition control electronic air cleaner terminals (EAC) are energized with 115 volts whenever the circulator blower is energized.

Gas Supply and Piping

Proper Piping Practice

The gas line installation must comply with local codes, or in the absence of local codes, with the latest edition of the National Fuel Gas Code NFPA 54/ANSI Z223.1.

IMPORTANT NOTE: This unit is factory set to operate on **natural gas** at the altitudes shown on the rating plate. The plate is stamped with the model number, type of gas and gas input rating. Make sure the unit is equipped to operate on the type of gas available.

DO NOT VARY FROM THE MINIMUM SUPPLY PRESSURE GIVEN IN TABLE 1.

Doing so could create ignition problems.

DO NOT EXCEED THE RATED INPUT SHOWN ON THE RATING PLATE.

Overfiring of the unit could result in premature heat exchanger failure.

DO NOT UNDERSIZE THE NATURAL/PROPANE GAS PIPING FROM THE METER/TANK TO THE UNIT.

Doing so could cause unsatisfactory operation or equipment damage due to under firing of equipment.

When sizing a trunk line (Table 2), include all appliances on that line that could be operated simultaneously.

Inlet Gas Pressure	
Natural	Min. 5.0" W.C., Max. 10.0" W.C.
Propane	Min. 11.0" W.C., Max. 13.0" W.C.

Inlet Gas Pressure Must Not Exceed the Maximum Value Shown in Table Above.

Table 1

Natural Gas Capacity of Pipe in Cubic Feet of Gas Per Hour (CFH)					
Length of Pipe in Feet	Nominal Black Pipe Size (inches)				
	1/2	3/4	1	1 1/4	1 1/2
10	132	278	520	1050	1600
20	92	190	350	730	1100
30	73	152	285	590	980
40	63	130	245	500	760
50	56	115	215	440	670
60	50	105	195	400	610
70	46	96	180	370	560
80	43	90	170	350	530
90	40	84	160	320	490
100	38	79	150	305	460

Pressure = .50 PSIG or less and Pressure Drop of 0.3" W.C. (Based on 0.60 Specific Gravity Gas)

$$\text{CFH} = \frac{\text{BTUH Furnace Input}}{\text{Heating Value of Gas (BTU/Cubic Foot)}}$$

Table 2

WARNING

To prevent death, personal injury or property damage when either using propane gas alone or at higher altitudes, obtain and install the proper conversion kit(s). Failure to do so can result in unsatisfactory operation and/or equipment damage. High altitude kits are for U.S. installations only and are not approved for use in Canada.

Gas Supply and Piping

High Altitude Derate

When this furnace is installed at high altitude, the appropriate High Altitude orifice kit must be applied. This is required due to the natural reduction in the density of both the gas fuel and combustion air as altitude increases. The kit will provide the proper design certified input rate within the specified altitude range.

High altitude kits are purchased according to the installation altitude and usage of either natural or propane gas. Refer to the product Specification Sheet for a tabular listing of appropriate altitude ranges and corresponding manufacturer's high altitude (natural, propane gas, and/or pressure switch) kits.

Do **not** derate the furnace by adjusting the manifold pressure to a lower pressure than specified on the furnace rating plate. The combination of the lower air density and a lower manifold pressure will prohibit the burner orifice from drawing the proper amount of air into the burner. This may cause incomplete combustion, flashback, and possible yellow tipping.

In some areas the gas supplier may artificially derate the gas in an effort to compensate for the effects of altitude. If the gas is artificially derated, the appropriate orifice size must be determined based upon the BTU/ft^3 content of the derated gas and the altitude. Refer to the National Fuel Gas Code, NFPA 54/ANSI Z223.1, and information provided by the gas supplier to determine the proper orifice size.

A different pressure switch may be required at high altitude regardless of the BTU/ft^3 content of the fuel used. Refer to the product Specification Sheet for a tabular listing of appropriate altitude ranges and corresponding manufacturer's pressure switch kits.

Gas Piping Connections

The gas piping supplying the furnace must be properly sized based on the gas flow required, specific gravity of the gas, and length of the run. The gas line installation must comply with local codes, or in their absence, with the latest edition of the National Fuel Gas Code, NFPA 54/ANSI Z223.1.

To connect the furnace to the building's gas piping, the installer must supply a ground joint union, drip leg, manual shutoff valve, and line and fittings to connect to gas valve. In some cases, the installer may also need to supply a transition piece from 1/2" pipe to a larger pipe size.

The following rules apply when installing piping:

1. Use black iron or steel pipe and fittings for the building piping.
2. Use pipe joint compound on male threads only. Pipe joint compound must be resistant to the action of the fuel used.
3. Use ground joint unions.
4. Install a drip leg to trap dirt and moisture before it can enter the gas valve. The drip leg must be a minimum of three inches long.
5. Install 1/8" NPT pipe plug fitting, accessible for test gage connection, upstream of the gas supply connection to the furnace.
6. Use two pipe wrenches when making connection to the gas valve to keep it from turning. Maintain factory shipped orientation.
7. Install a manual shutoff valve in a convenient location between the meter and the unit within six feet of unit. Any union installed, must be downstream of the manual shutoff valve and located between the shutoff valve and furnace.
8. Tighten all joints securely.

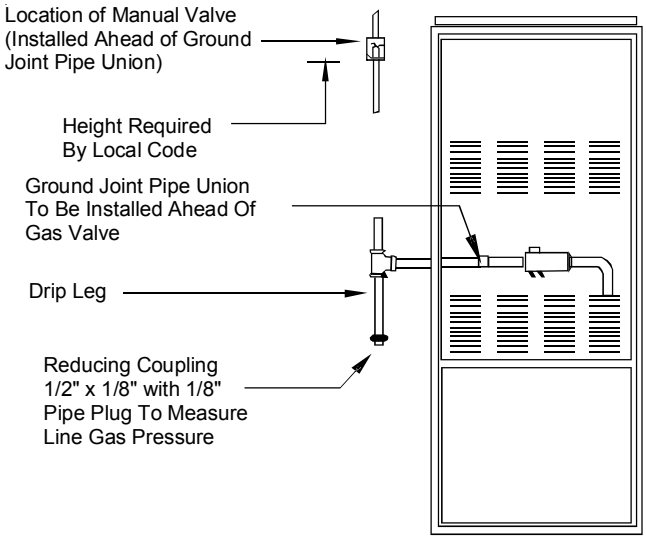

Gas Piping Connections

9. The unit must be connected to the building piping by one of the following methods:
   - Rigid metallic pipe and fittings
   - Semirigid metallic tubing and metallic fittings (Aluminum alloy tubing must not be used in exterior locations)
   - Listed gas appliance connectors used in accordance with the terms of their listing that are completely in the same room as the equipment
   - Protect connectors and semirigid tubing against physical and thermal damage when installed. Ensure aluminum-alloy tubing and connectors are coated to protect against external corrosion when in contact with masonry, plaster, or insulation, or subjected to repeated wetting by liquids such as water (except rain water), detergents, or sewage.

Inlet Piping

When the gas piping enters through the right side of the furnace, the installer must supply the following fittings (starting from the gas valve):

- 90 degree elbows (2).
- Close nipple.
- Straight pipe to reach the exterior of the furnace.

A ground joint union, drip leg, and manual shutoff valve must also be supplied by the installer. In some cases, the installer may also need to supply a transition piece from 1/2" to another pipe size.

When the gas piping enters through the left side of the furnace, the installer must supply the following fittings (starting from the gas valve):

- Straight pipe to reach the exterior of the furnace.
- A ground joint union, drip leg, and manual shutoff valve must also be supplied by the installer. In some cases, the installer may also need to supply a transition piece from 1/2 inch to another pipe size.

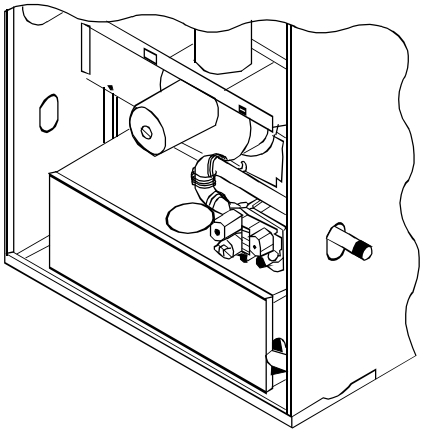

Gas Inlet Through Furnace Right Side

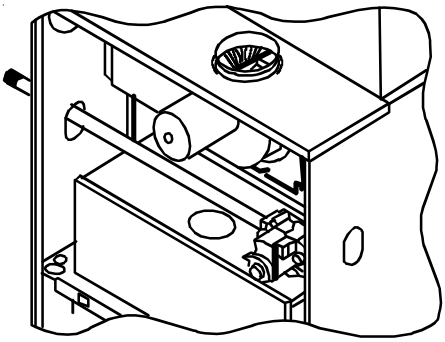

Gas Inlet Through Furnace Left Side

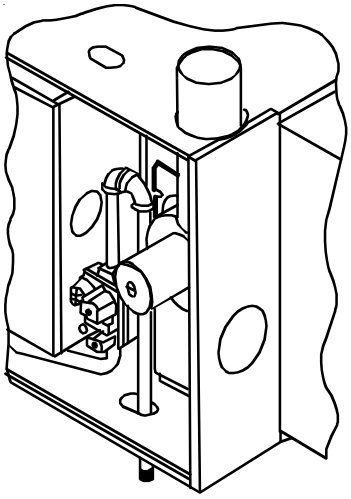

Gas Inlet Through Furnace Bottom Side

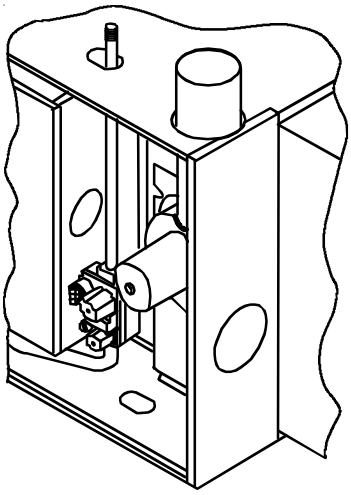

Gas Inlet Through Furnace Top Side

Gas Supply and Piping

Gas Piping Checks

WARNING

To avoid the possibility of explosion or fire, never use a match or open flame to test for leaks.

CAUTION

To prevent personal injury or property damage due to fire, the following instructions must be performed regarding gas connections, pressure testing, location of shutoff valve and installation of gas piping.

Before placing unit in operation, leak test the unit and gas connections.

Check for leaks using an approved chloride-free soap and water solution, an electronic combustible gas detector, or other approved testing methods.

NOTE: Never exceed specified pressures for testing. Higher pressure may damage the gas valve and cause subsequent overfiring, resulting in heat exchanger failure.

Disconnect this unit and shutoff valve from the gas supply piping system before pressure testing the supply piping system with pressures in excess of 1/2 psig (3.48 kPa).

Isolate this unit from the gas supply piping system by closing its external manual gas shutoff valve before pressure testing supply piping system with test pressures equal to or less than 1/2 psig (3.48 kPa).

Propane Gas and/or High Altitude Installations

WARNING

Possible death, personal injury or property damage may occur if the correct conversion kits are not installed. The appropriate kits must be applied to insure safe and proper furnace operation. All conversions must be performed by a qualified installer or service agency.

This furnace is shipped from the factory configured for natural gas at standard altitude. Propane gas installations require an orifice change to compensate for the energy content difference between natural and propane gas.

High altitude installations may require both a pressure switch and an orifice change. These changes are necessary to compensate for the natural reduction in the density of both the gas fuel and the combustion air at higher altitude.

Refer to the product Specification Sheet for a tabular listing of appropriate manufacturer's kits for propane gas and/or high altitude installations. The indicated kits are required to insure safe and proper furnace operation. All conversions must be performed by a qualified installer or service agency.

Propane Gas Tanks and Piping

WARNING

PERSONAL INJURY HAZARD

To prevent death, personal injury, or property damage due to fire or explosion from a propane gas leak, install a gas detecting warning device. A gas detecting warning device is the only reliable way to detect a propane gas leak. Do not rely on smell as rust can reduce the level of odorant in propane gas.

Remember:

- Propane gas is heavier than air and leaking gas can settle in any low area or confined space.
- A propane gas odor can fade, making the gas undetectable.
- A warning device is a required item, if the propane gas unit is installed in either a basement, an excavated area or a confined space.

If the presence of gas is suspected:

- Do not try to light any appliance.
- Do not touch any electrical switch or use any phone in your building.
- Immediately call your gas supplier from a neighbor's phone. Follow the gas supplier's instructions.
- If you cannot reach your gas supplier, call the fire department.

IN CANADA "THE CONVERSION SHALL BE CARRIED OUT IN ACCORDANCE WITH THE REQUIREMENTS OF THE PROVINCIAL AUTHORITIES HAVING JURISDICTION AND IN ACCORDANCE WITH THE REQUIREMENTS OF THE CAN/CSA B149.1 AND B149.2 INSTALLATION CODE."

IMPORTANT NOTE: Propane gas conversion kits must be installed to convert units to propane gas. See Specification Sheet for kit part number for this model.

All propane gas equipment must conform to the safety standards of the National Board of Fire Underwriters (See NBFU Manual 58).

For satisfactory operation, propane gas supply pressure must be 11 inch W.C. at the unit manifold with all gas appliances in operation. Maintaining proper gas pressure depends on three main factors:

1. Vaporization rate, which depends on (a) temperature of the liquid, and (b) wetted surface area of the container or containers.
2. Proper pressure regulation. (Two-stage regulation is recommended for both cost and efficiency).
3. Pressure drop in lines between regulators, and between second stage regulator and the appliance. Pipe size required will depend on length of pipe run and total load of all appliances.

Complete information regarding tank sizing for vaporization, recommended regulator settings, and pipe sizing is available from most regulator manufacturers and propane gas suppliers.

Since propane gas will quickly dissolve white lead and most standard commercial compounds, special pipe dope must be used. Shellac-based compounds resistant to the actions of liquefied petroleum gases such as Gasolac®, Stalactic®, Clyde's® or John Crane® are satisfactory.

Refer to the following illustration for typical propane gas installations.

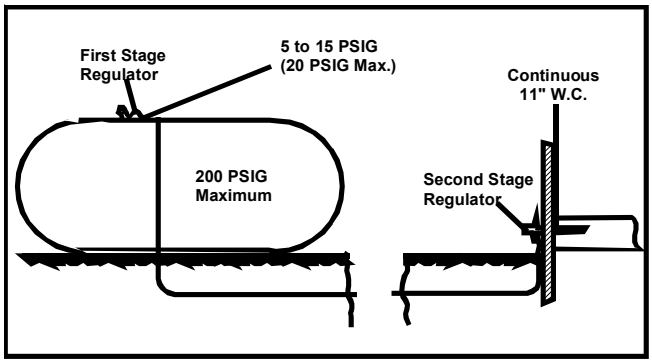

Propane Gas Installation (Typ.)

Sizing Between First and Second Stage Regulator*

Maximum Propane Capacities listed are based on 2 psig pressure drop at 10 psig setting.
Capacities in 1,000 BTU/hour.

Pipe or Tubing Length, Feet	Tubing Size, O.D. Type L					Nominal Pipe Size Schedule 40	
	3/8"	1/2"	5/8"	3/4"	7/8"	1/2"	3/4"
10	730	1,700	3,200	5,300	8,300	3,200	7,500
20	500	1,100	2,200	3,700	5,800	2,200	4,200
30	400	920	2,000	2,900	4,700	1,800	4,000
40	370	850	1,700	2,700	4,100	1,600	3,700
50	330	770	1,500	2,400	3,700	1,500	3,400
60	300	700	1,300	2,200	3,300	1,300	3,100
80	260	610	1,200	1,900	2,900	1,200	2,600
100	220	540	1,000	1,700	2,600	1,000	2,300
125	200	490	900	1,400	2,300	900	2,100
150	190	430	830	1,300	2,100	830	1,900
175	170	400	780	1,200	1,900	770	1,700
200	160	380	730	1,100	1,800	720	1,500

To convert to capacities at 15 psig settings - multiply by 1.130
To convert to capacities at 5 psig settings - multiply by 0.879

Sizing Between Single or Second Stage Regulator and Appliance*

Maximum Propane Capacities Listed are Based on 1/2" W.C. pressure drop at 11" W.C. setting.
Capacities in 1,000 BTU/hour.

Pipe or Tubing Length, Feet	Tubing Size, O.D. Type L						Nominal Pipe Size Schedule 40				
	3/8"	1/2"	5/8"	3/4"	7/8"	1-1/8"	1/2"	3/4"	1"	1-1/4"	1-1/2"
10	39	92	199	329	501	935	275	567	1,071	2,205	3,307
20	26	62	131	216	346	630	189	393	732	1,496	2,299
30	21	50	107	181	277	500	152	315	590	1,212	1,858
40	19	41	90	145	233	427	129	267	504	1,039	1,559
50	18	37	79	131	198	376	114	237	448	913	1,417
60	16	35	72	121	187	340	103	217	409	834	1,275
80	13	29	62	104	155	289	89	185	346	724	1,066
100	11	26	55	90	138	255	78	162	307	630	976
125	10	24	48	81	122	224	69	146	275	567	866
150	9	21	43	72	109	202	63	132	252	511	787
200	8	19	39	66	100	187	54	112	209	439	665
250	8	17	36	60	93	172	48	100	185	390	590

*Data in accordance with NFPA pamphlet NO. 54

Circulating Air and Filters

Ductwork Sizing

Duct systems and register sizes must be properly designed for the CFM and external static pressure rating of the furnace. Ductwork should be designed in accordance with the recommended methods of "Air Conditioning Contractors of America" Manual D.

A duct system must be installed in accordance with Standards of the National Board of Fire Underwriters for the Installation of Air Conditioning, Warm Air Heating and Ventilating Systems. Pamphlets No. 90A and 90B.

A closed return duct system must be used, with the return duct connected to the furnace. **NOTE: Ductwork must never be attached to the back of the furnace.** Supply and return connections to the furnace may be made with flexible joints to reduce noise transmission. To prevent the blower from interfering with combustion air or draft when a central return is used, a connecting duct must be installed between the unit and the utility room wall. A room, closet, or alcove must not be used as a return air chamber.

When the furnace is used in connection with a cooling unit, the furnace should be installed in parallel with or on the upstream side of the cooling unit to avoid condensation in the heating element. With a parallel flow arrangement, the dampers or other means used to control the flow of air must be adequate to prevent chilled air from entering the furnace and, if manually operated, must be equipped with means to prevent operation of either unit unless the damper is in the full heat or cool position.

When the furnace is installed without a cooling coil, it is recommended that a removable access panel be provided in the outlet air duct. This opening shall be accessible when the furnace is installed and shall be of such a size that the heat exchanger can be viewed for visual light inspection or such that a sampling probe can be inserted into the airstream. The access panel must be made to prevent air leaks when the furnace is in operation.

When the furnace is heating, the temperature of the return air entering the furnace must be between 55°F and 100°F.

When a furnace is installed so that supply ducts carry air circulated by the furnace to areas outside the space containing the furnace, the return air shall also be handled by a duct sealed to the furnace casing and terminating outside the space containing the furnace.

Filters

Read This Section Before Installing The Return Air Ductwork

Filters must be used with this furnace. Discuss filter maintenance with the building owner. Filters do not ship with this furnace, but must be provided by the installer. Filters must comply with UL900 or CAN/ULCS111 standards. If the furnace is installed without filters, the warranty will be voided.

Use a straight edge to scribe lines, connect the guide dimples located on the side return cutout locations. Cut out the opening on these lines.

NOTE: An undersized opening will cause reduced airflow.

Units with an air delivery of less than 1800 CFM should either use the bottom return or one-side return.

Units with an air delivery of 1800 CFM or higher must either use a two-side return combination or a one-side return and one bottom return combination. These combinations provide proper airflow through the unit.

To ensure proper unit performance follow the filter sizes given in the Specifications Sheet.

Upright Installations

Depending on the installation and/or customer preference, differing filter arrangements can be applied. Filters can be installed in the central return register, the bottom of the blower compartment, a side panel external filter rack kit, or inside the side panel. As an alternative a media air filter or electronic air cleaner can be used as the requested filter. Review and follow the filter sizes given in the Specifications Sheet to ensure proper unit performance. The following figures show possible filter locations.

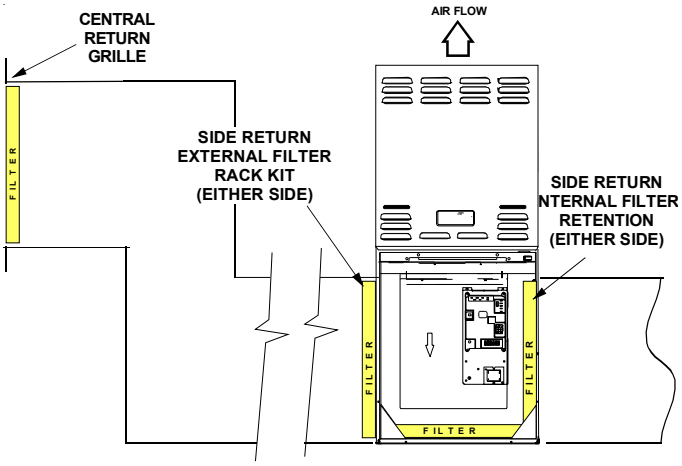

Possible Filter Locations

Horizontal Installations

Filters must be installed in either the central return register or in the return air duct work.

Refer to the Specification Sheet for recommended minimum filter sizes.

Startup Adjustments and Measurements

Furnace must have a 115 VAC power supply properly connected and grounded. Proper polarity must be maintained for correct operation. An interlock switch prevents furnace operation if the blower door is not in place. Keep the blower access door in place except for inspection and maintenance.

This furnace is also equipped with a self-diagnosing electronic control module. In the event a furnace component is not operating properly, the control module LED will flash on and off in a factory-programmed sequence, depending on the problem encountered. This light can be viewed through the observation window in the blower access door. Refer to the *Troubleshooting Chart* for further explanation of the lighting codes.

On new installations, or if a functional part such as the gas valve, pressure switch, or limit control has been replaced, verify that the furnace is operating properly after servicing.

Check furnace operation as outlined in the following instructions. If any sparking, odors, or unusual noises are encountered, shut off electrical power and recheck for wiring errors, or obstructions in or near the blower motors. Various shipping materials must be removed before the blower motor is operated. In addition to the following startup adjustments and measurements items, refer to further information in *Operational Checks*.

Furnace Operation

Purge gas lines of air prior to startup. Be sure not purge lines into an enclosed burner compartment.

Check for leaks using an approved chloride-free soap and water solution, an electronic combustible gas detector, or other approved method. Verify that all required kits (propane gas, high altitude, etc.) have been appropriately installed.

NOTE: An interlock switch prevents furnace operation if the blower door is not in place. Keep the blower access doors in place except for inspection and maintenance.

Furnace Startup

1. Close the manual gas shut-off valve external to the furnace.
2. Turn off the electrical power to the furnace.
3. Set the room thermostat to the lowest possible setting.
4. Remove the burner compartment door.

NOTE: This furnace is equipped with an electronic ignition device which automatically lights the burner. Do not try to light the burner by hand.

5. Turn the gas control knob clockwise to the OFF position. **Note:** The knob should turn easily. Do not use excessive force.
6. Wait five minutes then smell for gas. Be sure check near the floor as some types of gas are heavier than air.
7. If you smell gas after five minutes, immediately follow the instructions on page 4 of this manual. If you do not smell gas after five minutes:

   Turn the gas control knob counterclockwise to the ON position. The knob should turn easily. Do not use excessive force.
8. Replace the burner compartment door.
9. Open the manual gas shut-off valve external to the furnace.
10. Turn on the electrical power to the furnace.
11. Set the room thermostat to the desired temperature.

NOTE: There is an approximate 30 second delay between thermostat energizing and burner firing.

Furnace Shutdown

1. Set the thermostat to the lowest setting.
2. Turn off the electrical power supply to the furnace.
3. Turn the gas control knob clockwise to the OFF position. The knob should turn easily. Do not use excessive force.
4. Close manual gas shutoff valve external to the furnace and replace burner compartment door.

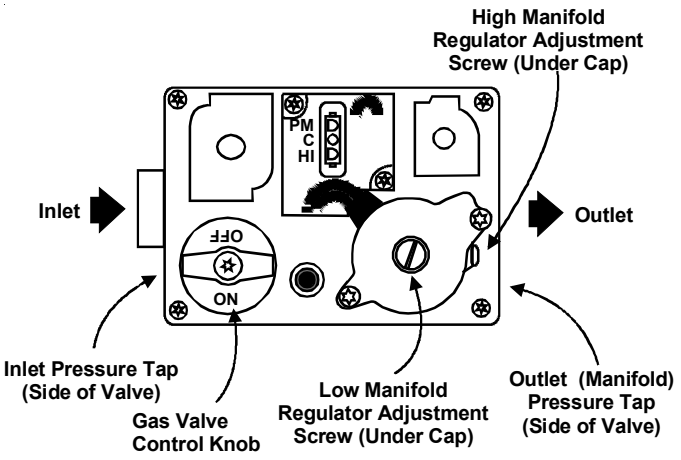

White-Rodgers Model 36E96

Measure Gas Supply Pressure

CAUTION

To prevent unreliable operation or equipment damage, the inlet gas supply pressure must be as specified on the unit rating plate with all other household gas fired appliances operating.

The line pressure supplied to the gas valve must be within the range specified in the "Inlet Gas Supply Pressure" table.

Inlet Gas Supply Pressure	
Natural Gas	Minimum:5.0" W.C. Maximum :10.0" W.C.
Propane Gas	Minimum:11.0" W.C. Maximum :13.0" W.C.

Measure the supply pressure at the gas valve inlet pressure tap or at a hose fitting installed in the gas piping drip leg. The supply pressure must be measured with the burners operating. To measure the gas supply pressure, use the following procedure.

1. Turn OFF gas to furnace at the manual gas shutoff valve external to the furnace.
2. Connect a calibrated water manometer (or appropriate gas pressure gauge) at either the gas valve inlet pressure tap or the gas piping drip leg.

NOTE: At either location, a hose fitting must be installed prior to making the hose connection.

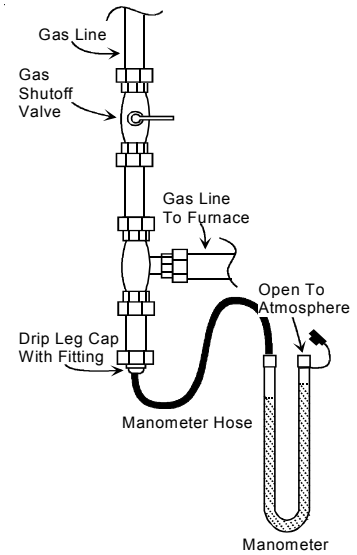

Measuring Inlet Gas Pressure (Alternate Method)

3. Turn ON the gas supply and operate the furnace and all other gas consuming appliances on the same gas supply line.
4. Measure furnace gas supply pressure with burners firing. Supply pressure must be within the range specified in the "Inlet Gas Supply Pressure" table .

If supply pressure differs from the table, make necessary adjustments to pressure regulator, gas piping size, etc., and/or consult with local gas utility.

5. Turn OFF gas to furnace at the manual shutoff valve and disconnect manometer. Reinstall plug before turning on gas to furnace.
6. Turn OFF any unnecessary gas appliances started in step 3.

Measure and Adjust Gas Manifold Pressure

CAUTION

To prevent unreliable operation or equipment damage, the gas manifold pressure must be as specified on the unit rating plate. Only minor adjustments should be made by adjusting the gas valve pressure regulator.

Only small variations in gas pressure should be made by adjusting the gas valve pressure regulator. The manifold pressure must be measured with the burners operating. To measure and adjust the manifold pressure, use the following procedure.

1. Turn OFF gas to furnace at the manual gas shutoff valve external to the furnace.
2. Connect a calibrated water manometer (or appropriate gas pressure gauge) at the gas valve outlet pressure tap (refer to gas valve figure in previous section).
3. Turn ON the gas supply and operate the furnace.
4. Measure gas manifold pressure with burners firing. Adjust manifold pressure using the table below.

Manifold Gas Pressure			
Gas		Range	Nominal
Natural	Low Stage	1.6 - 2.2" w.c.	1.9" w.c.
	High Stage	3.0 - 3.6" w.c.	3.5" w.c.
Propane	Low Stage	5.7 - 6.3" w.c.	6.0" w.c.
	High Stage	9.7 - 10.3" w.c.	10.0" w.c.

The final manifold pressure must not vary more than ± 0.3 " w.c. from the above specified pressures. Any necessary major changes in gas flow rate should be made by changing the size of the burner orifice.

5. To adjust the gas valve pressure regulator, remove the regulator cap.

6. Turn the adjustment screw clockwise to increase the pressure, or counterclockwise to decrease the pressure.
7. Securely replace the regulator cap.
8. Turn OFF gas to furnace at the manual shutoff valve and disconnect manometer.
9. Reinstall gas valve outlet pressure tap plug before turning on gas to furnace.

Measure Natural Gas Input Rate

NOTE: The gas input rate to the furnace must never be greater than that specified on the unit rating plate.

Use the following procedure to measure natural gas input using the gas meter:

1. Turn OFF the gas supply to all other gas-burning appliances except the furnace.
2. While the furnace is operating, time and record one complete revolution of the smallest gas meter dial.
3. Calculate the number of seconds per cubic foot (sec/ ft^3) of gas being delivered to the furnace. If the dial is a one cubic foot dial, divide the number of seconds recorded in step 2 by one. If the dial is a two cubic foot dial, divide the number of seconds recorded in step 2 by two.
4. Calculate the furnace input in BTUs per hour (BTU/ hr). Input equals the sum of the installation's gas heating value and a conversion factor (hours to seconds) divided by the number of seconds per cubic foot. The measured input must not be greater than the input indicated on the unit rating plate.

   Installation's gas heating (HTG) value: 1,000 BTU/ft^3 (Obtained from gas supplier)

   Installation's seconds per cubic foot: 34 sec/ ft^3

   Conversion Factor (hours to seconds): 3600 sec/hr

   Input = (Htg. value x 3600) ÷ seconds per cubic foot

   Input = (1,000 BTU/ft^3 x 3600 sec/hr) ÷ 34 sec/ ft^3

   Input = 106,000 BTU/hr
5. Repeat steps 1 through 3 on high stage (2nd stage).

NOTE: The final manifold pressure cannot vary by more than ± 0.3" w.c. from the specified setting. Consult your local gas supplier if additional input rate adjustment is required.

6. Turn ON gas to and relight all other appliances turned off in step 1. Be certain that all appliances are functioning properly and that all pilot burners are operating.

Measure and Adjust Temperature Rise

Air temperature rise is the temperature difference between supply and return air. Temperature rise must be within the range specified on the unit rating plate. An incorrect temperature rise could cause condensing in or overheating of the heat exchanger. An airflow and temperature rise table is provided in the specification sheet. Determine and adjust temperature rise as follows:

1. Operate furnace with burners firing for approximately ten minutes. Ensure all registers are open and all duct dampers are in their final (fully or partially open) position.
2. Place thermometers in the return and supply ducts as close to the furnace as possible. Thermometers must not be influenced by radiant heat by being able to "see" the heat exchanger.
3. Subtract the return air temperature from the supply air temperature to determine the air temperature rise. Allow adequate time for thermometer readings to stabilize.
4. Adjust temperature rise by adjusting the circulator blower speed. Increase blower speed to reduce temperature rise. Decrease blower speed to increase temperature rise. Refer to *Adjust Circulator Blower Speeds* for speed changing details.

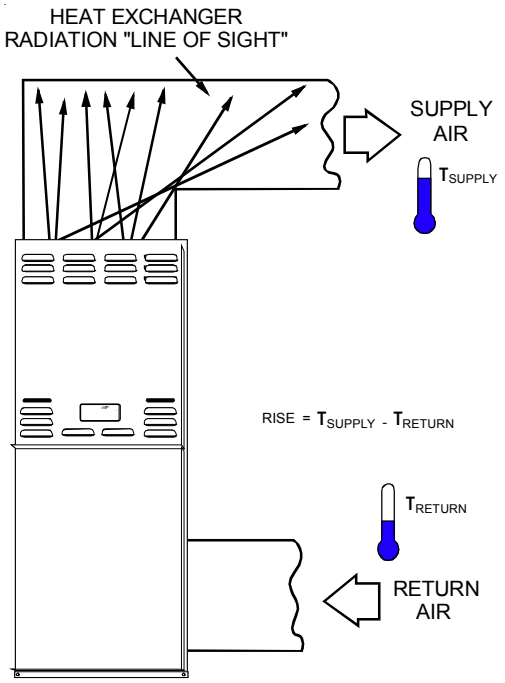

Temperature Rise Measurement

Adjust Circulator Blower Speeds

WARNING

To avoid death or personal injury due to electrical shock, turn off power to the furnace before changing speed taps.

All furnaces are shipped with heating speed set at “B” and cooling speed set at “D”. Use the following procedure to select the heating and cooling speed needed for your unit.

Use the CFM LED (green), adjacent to the integrated control module fuse to verify airflow quantity. The green CFM LED blinks once for each 100 CFM of airflow.

1. Determine the tonnage of the cooling system installed with the furnace. If the cooling capacity is in BTU/hr divide it by 12,000 to convert capacity to TONs.

   Example: Cooling Capacity of 30,000 BTU/hr.
   30,000/12,000 = 2.5 Tons

2. Determine the proper air flow for the cooling system. Most cooling systems are designed to work with air flows between 350 and 450 CFM per ton. Most manufacturers recommend an air flow of about 400 CFM per ton.

   Example: 2.5 tons X 400 CFM per ton = 1000 CFM

The cooling system manufacturer’s instructions must be checked for required air flow. Any electronic air cleaners or other devices may require specific air flows, consult installation instructions of those devices for requirements.

3. Knowing the furnace model, locate the high stage cooling air flow charts in the specification sheet. Look up the cooling air flow determined in step 2 and find the required cooling speed and adjustment setting.

   Example: A 70 kBtu furnace is to be installed with a 2.5 ton air conditioning system. The air flow needed is 1000 CFM. Using the cooling speed chart for the 70 kBtu furnace, find the airflow closest to 1000 CFM. A cooling airflow of 990 CFM can be attained by setting the cooling speed to “C” and the adjustment to “-” (minus).

   NOTE: Continuous Fan Speed will be 56% of high stage cooling.

4. Locate the blower speed selection DIP switches on the integrated control module. Select the desired “cooling” speed tap by positioning switches 1 and 2 appropriately. Select the desired “adjust” tap by positioning switches 3 and 4 appropriately. Refer to the following figure for switch positions and their corresponding taps. Turn off power to furnace for a minimum of 10 seconds, allowing motor to reset and recognize new speed selection. Turn on power to furnace. Verify CFM by counting the number of times the green CFM LED blinks.

5. Select the heating speed from the heating speed chart in the specification sheet for your model. The adjust setting (already established by the cooling speed selection) determines which set of speeds are available. The selected speed must provide a temperature rise within the rise range listed with the particular model.

   Example: The 70 kBtu is set for 990 CFM on cooling, the “ADJUST” is set to “-” (minus). The four heating speeds available are “A Minus”, “B Minus”, “C Minus”, and “D Minus”. “B Minus” has a rise of 56°F for both stages which is within the 30-60°F rise range for the 70 kBtu. This setting will keep electrical consumption to a minimum. Set the “Heat” speed DIP switches to “A”.

6. Select the desired “heating” speed tap by positioning switches 7 and 8 appropriately. Refer to figure above. Turn off power to furnace for a minimum of 10 seconds, allowing motor to reset and recognize new speed selection. Turn on power to furnace. Verify selected CFM by counting the green CFM LED blinks.

In general lower heating speeds will: reduce electrical consumption, lower operating sound levels of the blower, and increase the outlet air temperature delivered to the home. The speeds available allow the blower performance to be optimized for the particular homeowner’s needs.

	8 7	4 3 2 1
Cooling Speed Tap A		OFF OFF
Cooling Speed Tap B		OFF ON
Cooling Speed Tap C		ON OFF
Cooling Speed Tap D *		ON ON

Cooling Speed Taps
(* indicates factory setting)

	8 7	4 3 2 1
Normal *		OFF OFF
+ (Plus) Adjust		OFF ON
- (Minus) Adjust		ON OFF

Adjust Taps
(* indicates factory setting)

	8 7	4 3 2 1
Heating Speed Tap A	OFF OFF	
Heating Speed Tap B *	OFF ON	
Heating Speed Tap C	ON OFF	
Heating Speed Tap D	ON ON	

Heating Speed Taps
(* indicates factory setting)

Adjust Blower Heat Off Delay

The integrated control module provides a selectable heat off delay function. The heat off delay period may be set to 60, 90, 120, 180 seconds using the DIP switches or jumper provided on the control module. The delay is factory shipped at 90 seconds but may be changed to suit the installation requirements and/or homeowner preference. Refer to the following figures for switch positions and corresponding delay times.

ON ON	3 2 1	Heat Off Delay 60 Seconds
ON OFF	3 2 1	Heat Off * Delay 90 Seconds
OFF ON	3 2 1	Heat Off Delay 120 Seconds
OFF OFF	3 2 1	Heat Off Delay 180 Seconds

Heat Off Delay
(* indicates factory setting)

Heat Off Delay Switches

Normal Sequence of Operation

Power Up

The normal power up sequence is as follows:

- 115 VAC power applied to furnace.
- Integrated control module performs internal checks.
- Integrated control module flashes LED one time.
- Integrated control module monitors safety circuits continuously.
- Furnace awaits call from thermostat.

Heating Mode

The normal operational sequence in heating mode is as follows:

- R and W1 (or R and W1/W2) thermostat contacts close, initiating a call for heat.
- Integrated control module performs safety circuit checks.
- Induced draft blower is energized on high speed for a 10-second prepurge. Humidifier terminals are energized with induced draft blower.
- Induced draft blower steps to low speed following prepurge. Low stage pressure switch contacts are closed.
- Igniter warm up begins upon step to low speed and presence of closed low stage pressure switch contacts.
- Gas valve opens at end of igniter warm up period, delivering gas to burners and establishing flame.
- Integrated control module monitors flame presence. Gas valve will remain open only if flame is sensed.
- If the thermostat call is for low heat, gas valve and induced draft blower will continue on low stage. If the call is for high heat, the gas valve and induced draft blower will change to high stage.
- Circulator blower is energized on the appropriate heat speed following a fixed thirty second blower on delay. The circulator blower requires 30 seconds to ramp up to full speed. Electronic air cleaner terminals are energized with circulator blower.
- Furnace is now operating on the specified stage called for by the two-stage thermostat.
- Furnace runs, integrated control module monitors safety circuits continuously.
- If the two-stage thermostat changes the call from low heat to high heat, the integrated control module will immediately switch the induced draft blower, gas valve, and circulator blower to their high stage settings.
- If the two-stage thermostat changes the call from high heat to low heat, the control will immediately switch the induced draft blower and gas valve to their low stage settings. The circulator blower will remain on high heating speed for thirty seconds before switching to the low heat circulating speed.
- R and W1 (or R and W1/W2) thermostat contacts open, completing the call for heat.
- Gas valve closes, extinguishing flame.
- Induced draft blower is de-energized following a fifteen second post purge. Humidifier terminals are de-energized.
- Circulator blower continues running for the selected heat off delay period (60, 90, 120, or 180 seconds). The speed run during this period depends on the last heat call provided by the thermostat.

  If the last call for heat was a call for low heat, the air circulator motor will run on low heat speed for the duration of the heat off delay period (60, 90, 120, or 180 seconds).

  If the last call for heat was a call for high heat, the air circulating motor will run on the high heating speed for thirty seconds and then switch to the low heating speed for the **balance** of the heat off delay period (30, 60, 90, or 150 seconds).
- Circulator blower and electronic air cleaner terminals are de-energized
- Circulator blower ramps down to OFF during the 30 seconds following the heat off delay period.
- Furnace awaits next call from thermostat.

Normal Sequence of Operation

Cooling Mode

The normal operational sequence in cooling mode is as follows:

- R and YLO/G or Y/G thermostat contacts close, initiating a call for cool.
- Integrated control module performs safety circuit checks.
- Outdoor fan and compressor are energized to their appropriate speed.
- Circulator blower is energized on the appropriate cool speed following a fixed five second on delay. The circulator blower requires 30 seconds to ramp up to full speed. Electronic air cleaner terminals are energized with circulator blower.
- Furnace circulator blower and outdoor cooling unit run their appropriate speed, integrated control module monitors safety circuits continuously.
- R and YLO/G or Y/G thermostat contacts open, completing the call for cool.
- Outdoor fan and compressor are de-energized.
- Circulator blower continues running for a fixed 45-second cool off delay period. The speed run during this period depends on the last cooling call from the thermostat. If the call was for low cool, the blower will operate at 88% of low cool speed. If call was for high cool, blower operate at 88% of high cool speed.
- Electronic air cleaner terminals and circulator blower are de-energized.
- Furnace awaits next call from thermostat.

Fan Only Mode

The normal operational sequence in fan only mode is as follows:

- R and G thermostat contacts close, initiating a call for fan.
- Integrated control module performs safety circuit checks.
- Circulator blower is energized on continuous fan speed (56% of high stage cooling) following a five (5) second delay. Electronic air cleaner terminals are energized.
- Circulator blower runs, integrated control module monitors safety circuits continuously.
- R and G thermostat contacts open, completing the call for fan.
- Circulator blower is de-energized. Electronic air cleaner terminals are de-energized.
- Furnace awaits next call from thermostat.

Example 1: Continuous Call For Low Stage Heat Only

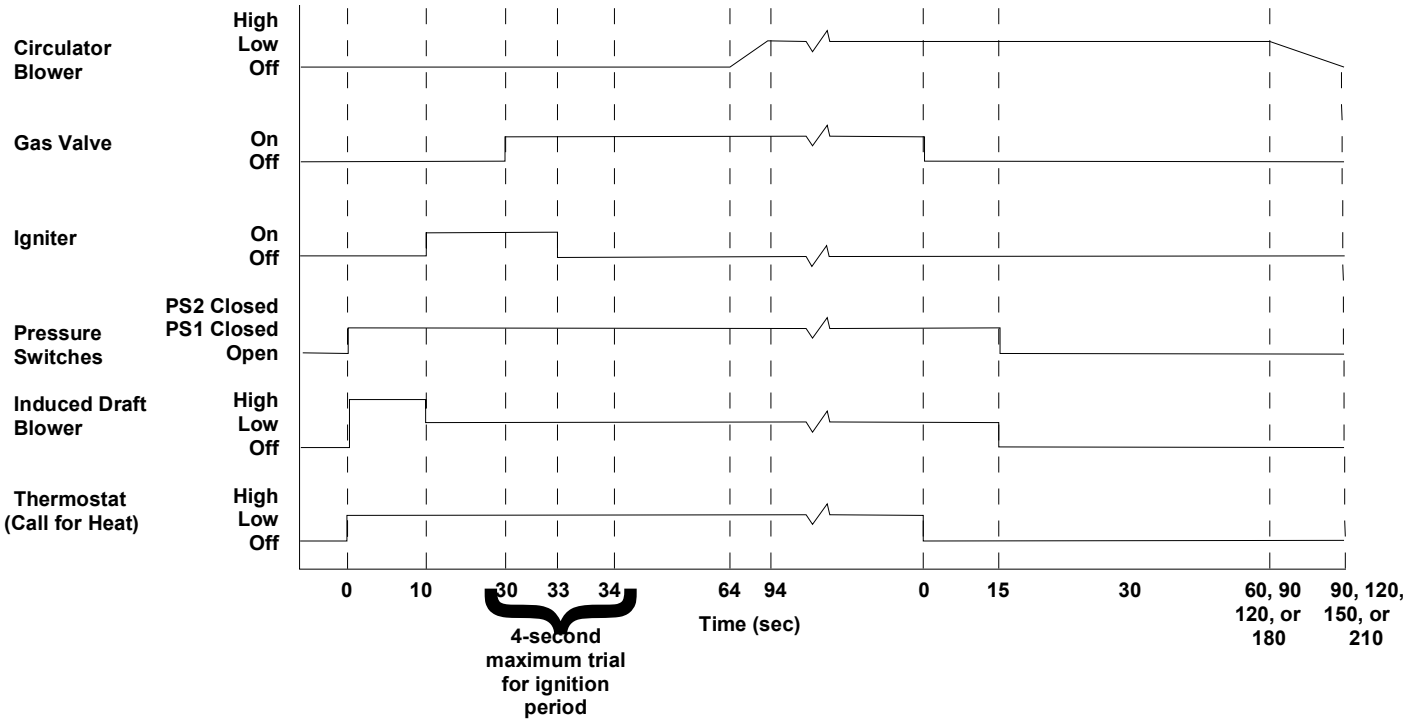

Example 2: Continuous Call For High Stage Heat Only

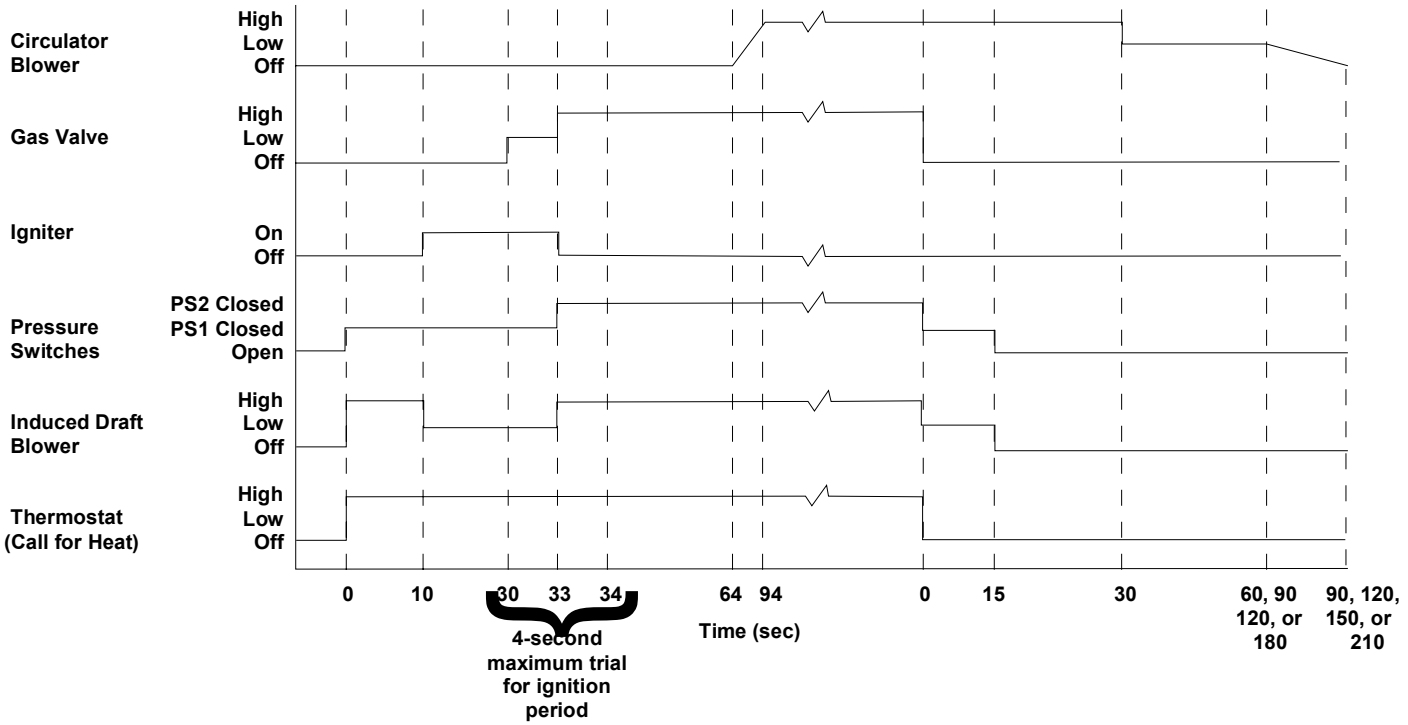

Example 3: Initial Call For Low Heat, Change In Call To High Heat

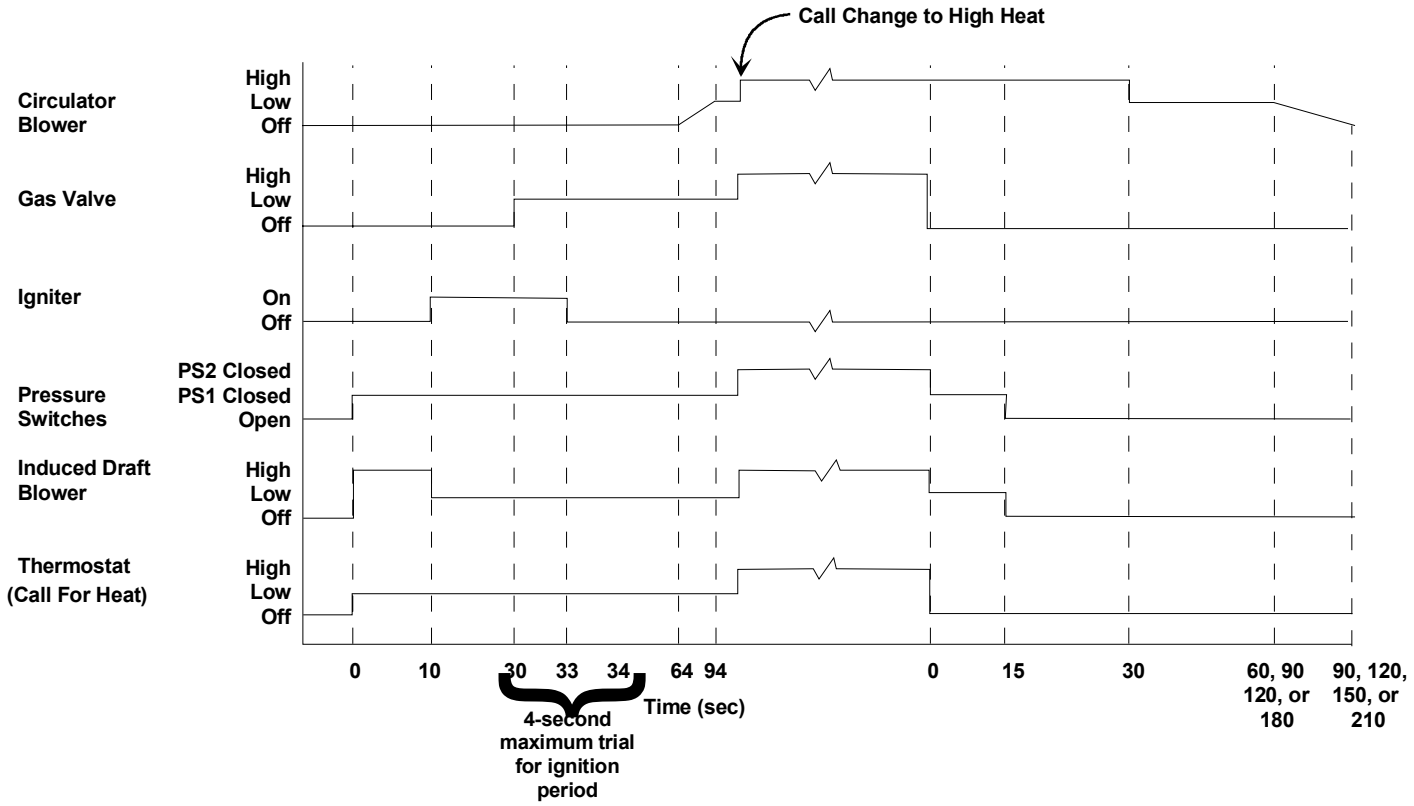

Example 4: Initial Call For High Heat, Subsequent Call To Low Heat

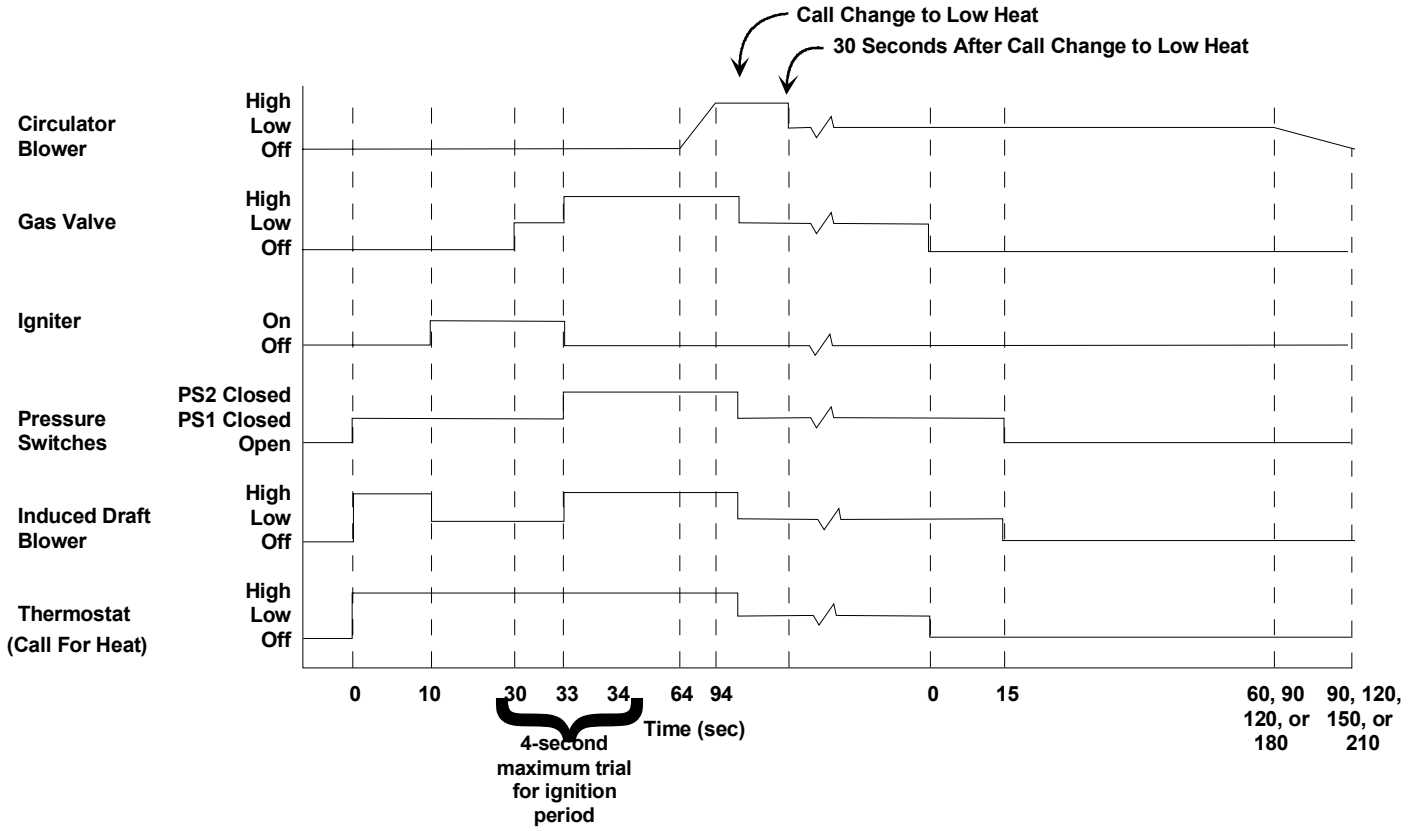

Timing Charts for Normal Cooling Operation

Example 1: Continuous Call For Low Stage Cooling Only

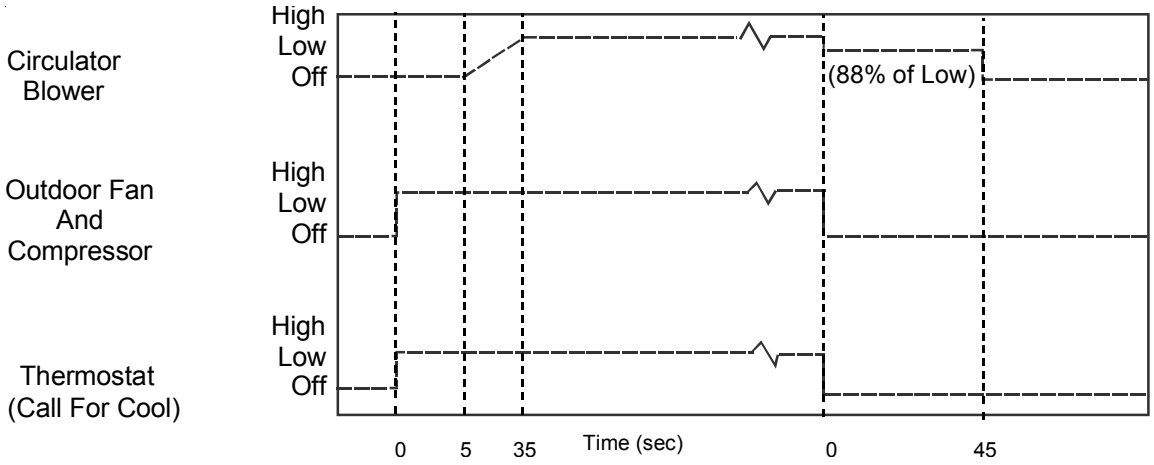

Example 2: Continuous Call For High Stage Cooling Only

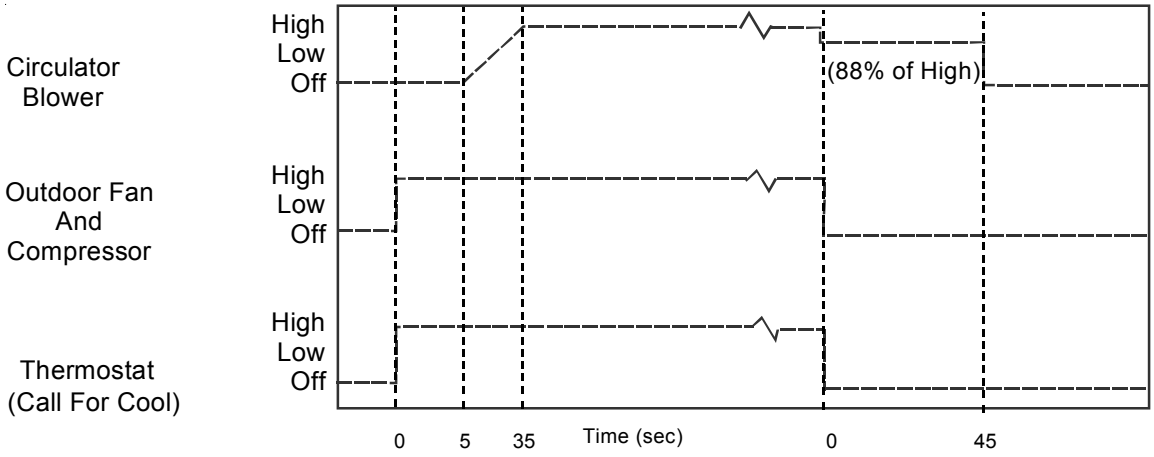

Timing Chart for Normal Fan Operation

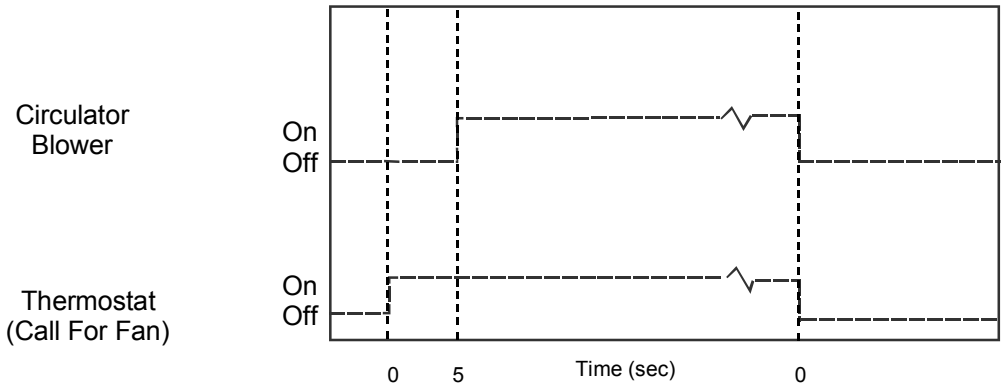

Operational Checks

These checks establish that the primary limit control is functioning and will respond to a restriction in the return air, or a circulator blower failure. If the primary limit control does not function during this test, the cause must be determined and corrected.

WARNING

To prevent personal injury or death, do not remove any internal compartment covers or attempt any adjustment. Electrical components are contained in both compartments. Contact a qualified service agent at once if an abnormal flame appearance should develop.

WARNING

To prevent death, personal injury or property damage due to fire, follow these directions for the auxiliary limit control. If the auxiliary limit control opens, it may be reset one time only.

WARNING

To prevent death, personal injury, property damage or premature failure of heat exchanger, do not adjust the primary limit control (factory set).

Burner Flame

The burner flames should be inspected with the burner compartment door installed. A sight glass is provided for inspection purposes. Flames should be stable, quiet, soft, and blue (dust may cause orange tips but they must not be yellow). Flames should extend directly outward from the burners without curling, floating, or lifting off. Flames must not impinge on the sides of the heat exchanger firing tubes.

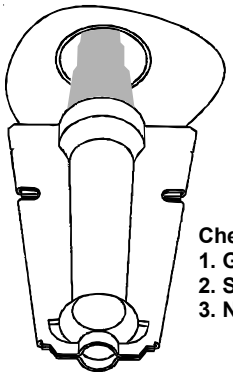

Check the burner flames for:
1. Good adjustment
2. Stable, soft and blue
3. Not curling, floating, or lifting off.

Burner Flame

Auxiliary Limit

A manual reset limits are located on or near the blower. To access this auxiliary limit, disconnect the electrical power and remove the blower door. If the limit control opens, the air circulation blower will run continuously. The diagnostic light will flash four times. These symptoms are identical to a trip of the primary limit control.

The auxiliary limit control is designed to prevent furnace operation in case of main blower failure on horizontal installations. It may also open if the power supply is interrupted while the furnace is firing.

The auxiliary limit control is suitable for both horizontal right and horizontal left installations. Regardless of airflow direction, it does not need to be relocated.

(**SERVICER'S NOTE:** If it becomes necessary to slide the blower assembly out of the furnace, the auxiliary limit control should be removed first. After the blower assembly is reinstalled, the auxiliary limit must be reinstalled.)

High or Primary Limit

The primary limit control guards against overheating resulting from insufficient conditioned air passing over the heat exchanger. If the primary limit control does not function during this test, the cause must be determined and corrected. Function of this control should be verified by gradually blocking the furnace return air after the furnace has been operating (burners firing) for approximately 15 minutes. Check the control as follows:

1. Allow the furnace to operate with burners firing continuously for approximately 15 minutes.
2. Gradually block the return air to furnace. Remove airflow blockage when limit control is activated and turns off burners. Airflow blockage causes unit overheating and will produce the following reactions:
   - The gas valve to close and extinguish flame,
   - The induced draft blower to deenergized after a fifteen second postpurge, and
   - The circulator blower to remain energized continuously until limit control resets.
3. Remove the return air blockage to clear overheating condition. After an acceptable temperature is reached during the cool down period, the limit control will reset and allow the furnace to resume normal operation.

These checks establish that the primary limit control is functioning and will respond to a restriction in the return air, or a circulator blower failure. If the primary limit control does not function during this test, the cause must be determined and corrected.

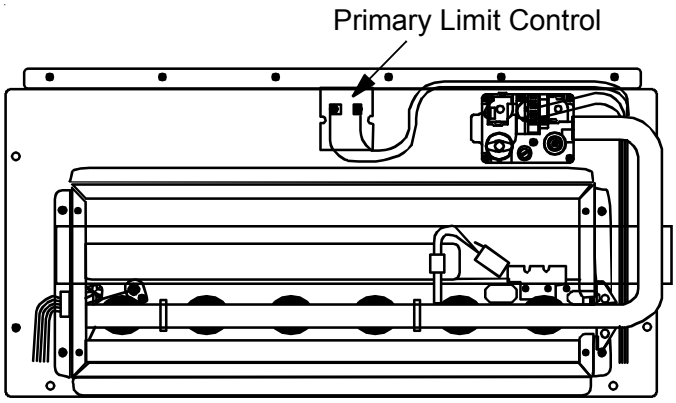

Primary Limit Control

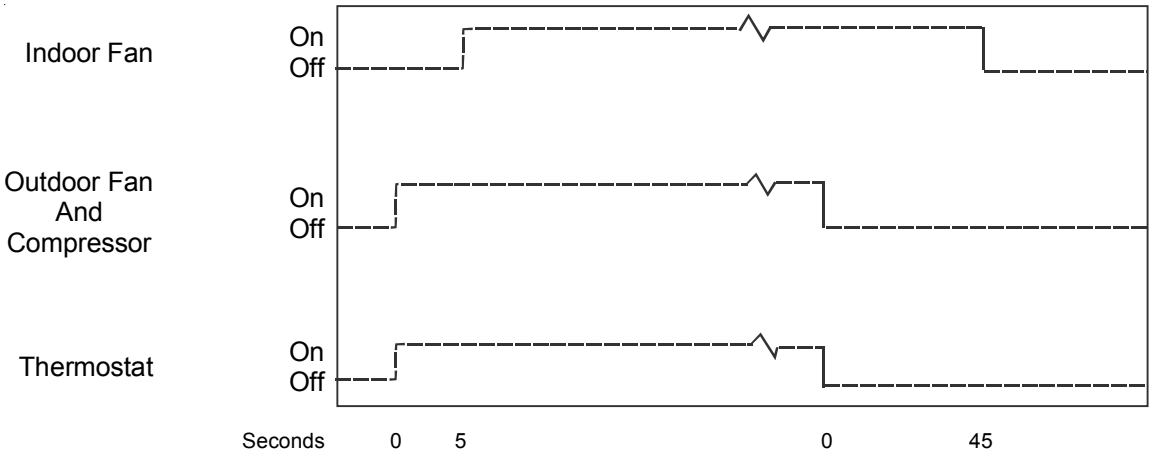

Safety Circuit Description

A number of safety circuits are employed to ensure safe and proper furnace operation. These circuits serve to control any potential safety hazards and serve as inputs in the monitoring and diagnosis of abnormal function. These circuits are continuously monitored during furnace operation by the integrated ignition control.

Integrated Ignition Control

The integrated ignition control is an electronic device which controls all furnace operations. Responding to the thermostat, the module initiates and controls normal furnace operation, and monitors and addresses all safety circuits. If a potential safety concern is detected, the module will take the necessary precautions and provide diagnostic information through an LED.

Primary Limit

The primary limit control is located on the partition panel and monitors heat exchanger compartment temperatures. It is a normally-closed (electrically), automatic reset, temperature-activated sensor. The limit guards against the overheating as a resulting of insufficient conditioned air passing over the heat exchanger.

Auxiliary Limit

The auxiliary limit controls are located on or near the circulator blower and monitors heat exchanger compartment temperatures. They are a normally-closed (electrically), manual-reset, temperature activated sensor. These limits guard against overheating as a result of insufficient conditioned air passing over the heat exchanger.

Rollout Limit

The rollout limit controls are mounted on the burner/manifold assembly and monitor the burner flame. They are normally-closed (electrically), manual-reset, temperature-activated sensors. These limits guard against burner flames not being properly drawn into the heat exchanger.

Pressure Switches

The pressure switches are normally-open (closed during operation), single-pole single-throw, negative air pressure-activated switches. They monitor the airflow (combustion air and flue products) through the heat exchanger via pressure taps located on the induced draft blower and the coil front cover. These switches guard against insufficient airflow (combustion air and flue products) through the heat exchanger and/or blocked condensate drain conditions.

Flame Sensor

The flame sensor is a probe mounted to the burner/manifold assembly which uses the principle of flame rectification to determine the presence or absence of flame.

Burner Box

This furnace must use indoor air for combustion. It is not a direct vent furnace, and it cannot be installed as a direct vent furnace. The burner box is present only to reduce the burner sound transmission.

Troubleshooting

Electrostatic Discharge (ESD) Precautions

NOTE: Discharge body's static electricity before touching unit. An electrostatic discharge can adversely affect electrical components.

Use the following precautions during furnace installation and servicing to protect the integrated ignition control from damage. By putting the furnace, the control, and the person at the same electrostatic potential, these steps will help avoid exposing the integrated ignition control to electrostatic discharge. This procedure is applicable to both installed and uninstalled (ungrounded) furnaces.

1. Disconnect all power to the furnace. Do not touch the integrated ignition control or any wire connected to the control prior to discharging your body's electrostatic charge to ground.
2. Firmly touch a clean, unpainted, metal surface of the furnaces near the control. Any tools held in a person's hand during grounding will be discharged.
3. Service integrated ignition control or connecting wiring following the discharge process in step 2. Use caution not to recharge your body with static electricity; (i.e., do not move or shuffle your feet, do not touch ungrounded objects, etc.). If you come in contact with an ungrounded object, repeat step 2 before touching control or wires.
4. Discharge your body to ground before removing a new control from its container. Follow steps 1 through 3 if installing the control on a furnace. Return any old or new controls to their containers before touching any ungrounded object.

Furnace Lockout

Furnace lockout results when a furnace is unable to achieve ignition after three attempts, or when it has lost flame five times during a single call for heat. It is characterized by a non-functioning furnace and a one flash diagnostic LED code. If the furnace is in "lockout", it will (or can be) reset in any of the following ways.

1. Automatic reset. The integrated ignition control will automatically reset itself and attempt to resume normal operations following a two hour lockout period.
2. Manual power interruption. Interrupt 115 volt power to the furnace for 0 - 30 seconds.
3. Manual thermostat cycle. Lower the thermostat so that there is no longer a call for heat then reset to previous setting. Interrupt thermostat signal to the furnace for 0 - 30 seconds.

NOTE: If the condition which originally caused the lockout still exists, the control will return to lockout. Refer to *Diagnostic Chart* section for aid in determining the cause.

Diagnostic Chart

WARNING

To avoid electrical shock, injury or death, disconnect electrical power before performing any service or maintenance.

For assistance in determining the source of unit operational problems, refer to the troubleshooting chart on the following pages The red diagnostic LED blinks to assist in troubleshooting the unit. The number of blinks refers to a specific fault code.

Troubleshooting Chart

Symptoms of Abnormal Operation	Associated LED Code[2]	Fault Description(s)	Possible Causes	Corrective Action	Cautions and Notes
• Furnace fails to operate. • Integrated control module diagnostic **LED** provides **no signal**.	NONE	• No 115 volt power to furnace, or no 24 volt power to integrated control module. • Blown fuse or circuit breaker. • No signal from thermostat.	• Manual disconnect switch OFF, door switch open, or 24 volt wires improperly connected or loose. • Blown fuse or circuit breaker. • Improper thermostat connection or setting.	• Assure 115 and 24 volt power to furnace integrated control module. • Check integrated control module fuse (3A). Replace if necessary. • Check for possible shorts in 115 and 24 volt circuits. Repair as necessary.	• Turn power OFF prior to repair. • Replace integrated control module fuse with 3A automotive fuse. • Improper thermostat connection or setting.
• Furnace fails to operate. • Integrated control module diagnostic **LED** is lit **continuously**.	ON CONTINUOUS ON	• Integrated control module has an internal fault.	• Integrated control module has an internal fault.	• Replace bad integrated control module.	• Turn power OFF prior to repair. • Read precautions in "Electrostatic Discharge" section of manual.
• Furnace fails to operate. • Integrated control module diagnostic **LED** is flashing **ONE** (1) flash.	1 1 FLASH	• Furnace lockout due to an excessive number of ignition "retries" (3 total) or "recycles (5 total)[1].	• Failure to establish flame. Cause may be no gas to burners, front cover pressure switch stuck open, bad igniter or igniter alignment, improper orifices, or coated/oxidized or improperly connected flame sensor. • Loss of flame after establishment. Cause may be interrupted gas supply, lazy burner flames (improper gas pressure or restriction in flue and/or combustion air piping), front cover pressure switch opening, or improper induced draft blower performance.	• Locate and correct gas interruption. • Check front cover pressure switch operation (hose, wiring, contact operation). Correct if necessary. • Replace or realign igniter. • Check flame sense signal. Sand sensor if coated and/or oxidized. • Check flue piping for blockage, proper length, elbows, and termination. • Verify proper induced draft blower performance.	• Turn power OFF prior to repair. • Igniter is fragile, handle with care. • Sand flame sensor with emery cloth. • See "Vent/Flue Pipe" section for piping details.
• Furnace fails to operate. • Integrated control module diagnostic **LED** is flashing **TWO** (2) flashes.	2 2 FLASHES	• Pressure switch circuit is closed. • Induced draft blower **is not** operating.	• Induced draft blower pressure switch contacts sticking. • Shorts in pressure switch circuit.	• Replace induced draft blower pressure switch. • Repair short.	
• Induced draft blower cycles ON for one minute and OFF for three minutes with no further furnace operation. • Integrated control module diagnostic **LED** is flashing **THREE** (3) flashes.	3 3 FLASHES	• Low stage pressure switch circuit does not close in response to induced draft blower operation.	• Pressure switch hose blocked, pinched or connected improperly. • Blocked flue and/or inlet air pipe, blocked drain system, or weak induced draft blower. • Incorrect low stage pressure switch setpoint or malfunctioning switch contacts. • Loose or improperly connected wiring.	• Inspect pressure switch hose. Repair, if necessary, • Inspect flue and/or inlet air piping for blockage, proper length, elbows, and termination. Check drain system. Correct as necessary. • Correct low stage pressure switch setpoint or contact motion. • Tighten or correct wiring connection.	• Turn power OFF prior to repair. • Replace pressure switch with proper replacement part. • Turn power OFF prior to repair. • Replace pressure switch with proper replacement part.

[1]Integrated control module will automatically attempt to reset from lockout after one hour.

Troubleshooting Chart

Symptoms of Abnormal Operation	Associated LED Code[2]	Fault Description(s)	Possible Causes	Corrective Action	Cautions and Notes
• Circulator blower runs continuously. No furnace operation. • Integrated control module diagnostic **LED** is flashing **FOUR** (4) flashes.	4 4 FLASHES	• Primary or auxiliary limit circuit is open. • Rollout limit circuit is open.	• Insufficient conditioned air over the heat exchanger. Blocked filters, restrictive ductwork, improper circulator blower speed, or failed circulator blower. • Flame rollout. • Misaligned burners, blocked flue and/or air inlet pipe, or failed induced draft blower. • Loose or improperly connected wiring.	• Check filters and ductwork for blockage. Clean filters or remove obstruction. • Check circulator blower speed and performance. Correct speed or replace blower if necessary. • Check burners for proper alignment. • Check flue and air inlet piping for blockage, proper length, elbows, and termination. Correct as necessary. • Check induced draft blower for proper performance. Replace, if necessary. • Tighten or correct wiring connection.	• Turn power OFF prior to repair. • See Specification Sheet for allowable rise range and proper circulator speed. • See “Vent/Flue Pipe” section for piping details. • Replace pressure switch with proper replacement part.
• Furnace fails to operate. • Integrated control module diagnostic **LED** is flashing **SIX** (6) flashes.	6 6 FLASHES	• Polarity of 115 volt power is reversed.	• Polarity of 115 volt AC power to furnace or integrated control module is reversed. • Poor unit ground.	• Review wiring diagram to correct polarity. • Verify proper ground. Correct if necessary. • Check and correct wiring.	• Turn power OFF prior to repair.
• Induced draft blower runs continuously. No furnace operation. • Integrated control module diagnostic **LED** is flashing **SEVEN** (7) flashes.	7 7 FLASHES	• Flame sense microamp signal is low.	• Flame sensor is coated/ oxidized. • Flame sensor incorrectly positioned in burner flame. • Lazy burner flame due to improper gas pressure or combustion air.	• Sand flame sensor is coated/oxidized. • Inspect for proper sensor alignment. • Check inlet air piping for blockage, proper length, elbows, and termination. • Compare current gas pressure to rating plate info. Adjust as needed.	• Turn power OFF prior to repair. • Sand flame sensor with emery clot. • See “Vent/Flue Pipe” section for piping details. • See rating plate for proper gas pressure.
• Furnace not operating. • Integrated control module diagnostic **LED** is flashing **EIGHT** (8) flashes**.**	8 8 FLASHES	• Problem with igniter circuit.	• Improperly connected igniter • Bad igniter • Poor unit ground	• Check and correct wiring from integrated control module to igniter • Replace bad igniter • Check and correct unit ground wiring	• Turn power OFF prior to repair. • Replace igniter with proper silicon nitride replace-ment part.
• Furnace operating on low stage gas with high stage induced draft blower • High stage circulator blower (temperature, of conditioned air, lower than typical). • Integrated control module diagnostic **LED** is flashing **NINE** (9) flashes**.**	9 9 FLASHES	• High stage pressure switch circuit does not close in response to high stage induced draft blower operation.	• Pressure switch hose blocked, pinched or connected improperly. • Blocked flue and/or inlet air pipe, blocked drain system, or weak induced draft blower. • Incorrect pressure switch setpoint or malfunctioning switch contacts. • Loose or improperly connected wiring.	• Inspect pressure switch hose. Repair, if necessary. • Inspect flue and/or inlet air piping for blockage, proper length, elbows, and termina-tion. Check drain system. Correct as necessary. • Correct pressure switch setpoint or contact motion. • Tighten or correct wiring connection.	• Turn power OFF prior to repair. • Replace pressure switch with proper replacement part.
• Induced draft blower runs continuously. No furnace operation. • Integrated control module diagnostic **LED** is flashing **continuously.**	C CONTINUOUS ON	• Flame sensed with no call for heat.	• Short to ground in flame sense circuit. • Lingering burner flame. • Slow closing gas valve	• Correct short at flame sensor or in flame sensor wiring. • Check for lingering flame • Verify proper operation of gas valve	• Turn power OFF prior to repair.

Maintenance

WARNING

To avoid electrical shock, injury or death, disconnect electrical power before performing any maintenance.

If you must handle the igniter, handle with care. Touching the igniter element with bare fingers, rough handling, or vibration could damage the igniter resulting in premature failure. Only a qualified servicer should ever handle the igniter.

The furnace should be inspected by a qualified installer, or service agency at least once per year. This check should be performed at the beginning of the heating season. This will ensure that all furnace components are in proper working order and that the heating system functions appropriately. Pay particular attention to the following items. Repair or service as necessary.

- Flue pipe system. Check for blockage and/or leakage. Check the outside termination and the connections at and internal to the furnace.
- Heat exchanger. Check for corrosion and/or buildup within the heat exchanger passageways.
- Burners. Check for proper ignition, burner flame, and flame sense.
- Wiring. Check electrical connections for tightness and/or corrosion. Check wires for damage.
- Filters.

Filters

WARNING

To prevent death, personal injury or property damage due to fire, never operate furnace without a filter installed. Dust and lint will build up on internal parts resulting in loss of efficiency, equipment damage and possible fire.

CAUTION

To ensure proper unit performance, adhere to the filter sizes given in the Specifications Sheet.

Improper filter maintenance is the most common cause of inadequate heating or cooling performance. Filters should be cleaned (permanent) or replaced (disposable) every two months or as required. When replacing a filter, it must be replaced with a filter of the same type and size.

Filter Removal

Depending on the installation, differing filter arrangements can be applied. Filters can be installed in the central return register, the bottom of the blower compartment, or a side panel external filter rack kit. A media air filter or electronic air cleaner can be used as an alternate filter. The filter sizes given in the Specifications Sheet must be followed to ensure proper unit performance. Refer to the following for removal and installation of filters.

To remove a filter from the bottom of the blower compartment:

1. Turn OFF electrical power to furnace.
2. Remove blower compartment door.
3. Push back and up on the wire filter retainer to release it from under the front lip of the furnace basepan.
4. Slide filter forward and out.
5. Replace filter by reversing the procedure for removal.

To remove internal filter(s) from the retaining rails on the side(s) of the blower compartment in an upright installation:

1. Turn OFF electrical power to furnace.
2. Remove the blower compartment door.
3. Grasp the lower portion of the filter and lift up.
4. Angle the filter towards the blower until the filter is clear of the bottom rail.
5. Lower the filter down and pull outward.
6. Replace the filter by reversing the procedure for removal.

To remove filters from an external filter rack in an upright installation, follow the directions provided with external filter rack kit.

Using a vacuum cleaner, clean out the blower area, external filter rack area, and the adjacent area of the return air duct.

Clean, wash and dry a permanent filter. When using a metal filter, both sides should be sprayed with a dust adhesive as recommended on adhesive container. Spray adhesives for use with permanent metal filters can be found at some hardware stores. BE SURE AIRFLOW DIRECTION ARROW POINTS TOWARDS THE BLOWER.

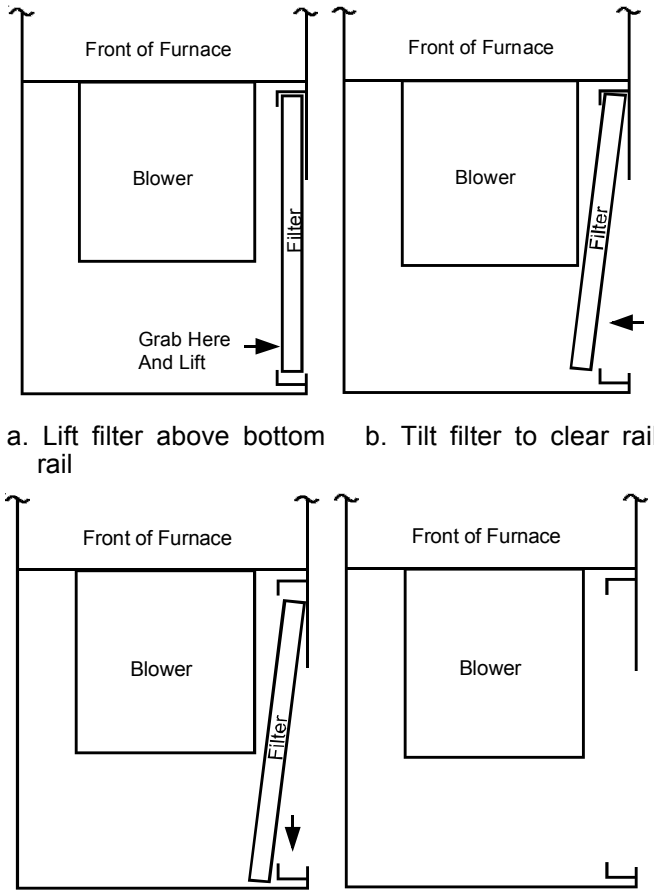

a. Lift filter above bottom rail

b. Tilt filter to clear rail.

c. Lower filter below top rail.

d. Pull filter out.

Filter Removal Procedure

Burners

Visually inspect the burner flames periodically during the heating season. Turn on the furnace at the thermostat and allow several minutes for flames to stabilize, since any dislodged dust will alter the flames normal appearance. Flames should be stable, quiet, soft, and blue (dust may cause orange tips but they must not be yellow). They should extend directly outward from the burners without curling, floating, or lifting off. Flames must not impinge on the sides of the heat exchanger firing tubes.

Induced Draft and Circulator Blowers

The bearings in the induced draft blower and circulator blower motors are permanently lubricated by the manufacturer. No further lubrication is required. Check motor windings for accumulation of dust which may cause overheating. Clean as necessary.

Qualified Servicer Only

Condensate Trap and Drain System

Annually inspect the drain tubes, drain trap, and field-supplied drain line for proper condensate drainage. Check drain system for hose connection tightness, blockage, and leaks. Clean or repair as necessary.

Flame Sensor

Under some conditions, the fuel or air supply can create a nearly invisible coating on the flame sensor. This coating acts as an insulator causing a drop in the flame sense signal. If the flame sense signal drops too low the furnace will not sense flame and will lock out. The flame sensor should be carefully cleaned by a qualified servicer using emery cloth or steel wool. Following cleaning, the flame sense signal should be as indicated in the Specifications Sheet.

Igniter

If the igniter and the surrounding air are at about 70°F and the igniter wires are not connected to any other electrical components, the resistance of the igniter should not exceed 200 ohms. If it does, the igniter should be replaced.

Flue Passages

Inspect the heat exchanger flue passageways at the beginning of each heating season. If it is necessary to clean them, follow the steps outlined below.

1. Turn OFF the electrical power and gas supply to the furnace.
2. Remove burner assembly by disconnecting the gas line and removing the manifold brackets from the partition panel.
3. Remove the flue from the induced draft blower and the collector box from the partition panel.
4. The primary heat exchanger tubes can be cleaned using a round wire brush attached to a length of high grade stainless steel cable, such as drain cleanout cable. Attach a variable speed reversible drill to the other end of the spring cable. Slowly rotate the cable with the drill and insert it into one of the primary heat exchanger tubes. While reversing the drill, work the cable in and out several times to obtain sufficient cleaning. Use a large cable for the large tube, and then repeat the operation with a small cable for the smaller tube. Repeat for each tube.
5. When all heat exchanger tubes have been cleaned, replace the parts in the reverse order in which they were removed.
6. To reduce the chances of repeated fouling of the heat exchanger, perform the steps listed in *Startup Adjustments and Measurements*.

Burner Cleaning

1. Shut off electric power and gas supply to the furnace.
2. Remove screws securing manifold to burner bracket. Slightly pull manifold out and away from burner bracket. Burners will drop. Re-secure manifold to burner bracket.
3. Tilt burners to slotted side of burner bracket. Rotate burners clockwise to remove.
4. Use bottle brush to clean burner insert and inside of burner.
5. Replace burner (opposite of removal). Ensure burners are fully seated on burner bracket tabs and are properly aligned.
6. Turn on electric power and gas supply to the furnace.
7. Check furnace for proper operation. Refer to *"Operational Checks"* section to verify burner flame characteristics.

Before Leaving an Installation

- Cycle the furnace with the thermostat at least three times. Verify cooling and fan only operation.
- Review the Owner's Manual with the homeowner and discuss proper furnace operation and maintenance.
- Leave literature packet near furnace.

Repair and Replacement Parts

- When ordering any of the listed functional parts, be sure to provide the furnace model, manufacturing, and serial numbers with the order.
- Although only functional parts are shown in the parts list, all sheet metal parts, doors, etc. may be ordered by description.

FUNCTIONAL PARTS LIST-

Two-Stage Gas Valve	Blower/Box Gasket
Natural Gas Orifice	Rollout Limit Switch
Propane Gas Orifice	Auxiliary Limit Switch
Burner	Heat Exchanger
Hot Surface Igniter	Door Switch
Flame Sensor	Transformer
Gas Manifold	Blower Wheel
Ignition Control	Blower Housing
Blower Mounting Bracket	Blower Cutoff
Pressure Switch	Blower Motor
Pressure Switch Hose	Motor Mount Bracket
Induced Draft Blower	Capacitor
Collector Box	